STANDARD DETAILS

Shelby
NORTH CAROLINA

CITY OF SHELBY
ENGINEERING DEPARTMENT

Adopted November 2, 2009

RESOLUTION NO. 71-2009

A RESOLUTION ADOPTING THE CITY OF SHELBY STANDARD DETAILS

WHEREAS, the existing City of Shelby Standard Details were adopted by the City of Shelby in April 2000; and

WHEREAS, the City of Shelby Engineering Department and the City Council of the City of Shelby desire to maintain an updated set of Standard Details to ensure quality and consistency in the construction of infrastructure improvements; and

WHEREAS, the city desires to replace the current City of Shelby Standard Details with an updated version of the City of Shelby Standard Details;

NOW, THEREFORE, BE IT RESOLVED BY THE CITY COUNCIL OF THE CITY OF SHELBY, NORTH CAROLINA:

Section 1. The "City of Shelby Standard Details" dated as November 2009 and on file in the City Engineer's Office are hereby adopted as the official Standard Details of the City of Shelby.

Section 2. The City Engineer shall periodically make recommendations to the City Manager regarding the update to the "City of Shelby Standard Details" in accord with modern technical applications and/or permitting changes based on industry standards. The City Manager shall bring substantial changes within these standard details to the attention of City Council for consideration and action as he deems necessary.

Section 3. This resolution shall become effective upon adoption and approval.

Adopted and approved this the 2nd day of November A. D. 2009.

W. Ted Alexander
Mayor

ATTEST:

Bernadette A. Parduski, CMC
City Clerk

STANDARD DETAIL
TABLE OF CONTENTS

Detail	Page Number
Parking Lot Definitions	1.01
Parking Layout Dimensions	1.02
Parking Plan 90° Parking	1.03
Parking Plan 60° Parking One-Way Movement	1.04
Parking Plan 45° Angle One-Way Movement	1.05
Typical Curb Sections for Parking Lot Details	1.06
Parking Barrier Sections	1.07
Standard Temporary Silt Fence Detail	2.01
Standard Temporary Sediment Trap	2.02
Curb Inlet Sediment Filter	2.03
Yard Inlet Sediment Filter	2.04
Temporary Construction Entrance	2.05
Dumpster Pad Detail	2.06
Standard Street Section	3.01
Local Residential Cul-de-Sac Symmetrical with Curb & Gutter	3.02
Standard Trench and Pavement Repair Sections	3.03
Standard Utility Corridor	3.04
Street Intersection Turn	3.05
Public Street Geometric Standards	3.06
Standard Concrete Curb and Gutter	4.01
Mountable or Valley Curb and Gutter	4.02
Standard Curb Drain	4.03
Standard Residential Driveway Apron	4.04A
Industrial or Commercial Concrete Driveway Entrance (10° Radius)	4.04B
Grades for Standard Driveway Entrances	4.04C

Standard Concrete Sidewalk	4.05
Standard Wheelchair Ramp Single Type	4.06
Standard Wheelchair Ramp Double Type	4.07
Basin Detail	5.01
Curb Inlet Detail	5.02
Curb and Gutter Transition	5.03
Standard Reinforced Concrete Headwall with Wing Walls	5.04
Splash Pad for Flared End Pipe	5.05
Pipe Bedding and Backfilling/Class D&C	6.01A
Pipe Bedding and Backfilling/Class B&A	6.01B
Standard Valve Box	6.02
Standard ¾" Backflow/Meter Assembly	6.03
Standard 1 ½" and 2" Meter Installation and Vault	6.04
Commercial Meter Vault	6.05
Standard Hydrant Installation	6.06
Standard Hydrant Location	6.07
Yard Hydrant (No-Freeze)	6.08
Blow Off	6.09
Standard Capping Detail	6.10
Standard Thrust Collar Installation	6.11
Standard Air Release Manhole for Water Lines	6.12
Standard Reaction Blocking	6.13
Standard Multiple Branch Service	6.14
Irrigation Tap on Existing Service	6.15
Typical Irrigation System Connection	6.16
Backflow Preventer in Hot Box	6.17
Post Type 2-1/8" Hydrant for Use at End of Main	6.18
Ferrous Materials and Joint Requirements for Water Line and Sewer Line Crossings	6.19

Standard and Sanitary Sewer Tap and Service to Existing Manhole	7.01A
Standard Sanitary Sewer Tap and Service to Existing Main	7.01B
Grease Interceptor Details and Specifications	7.02
4' Diameter Precast Manhole	7.03
5' Diameter Precast Manhole	7.04
Standard Manhole Rings and Cover for Manholes in Paved Areas	7.05A
Standard Manhole Ring and Cover for Watertight Manholes	7.05B
Standard Manhole Ring and Cover Encasement	7.06
Standard Drop Manhole	7.07
Standard Drop Manhole for Sewer Service	7.08
Standard Air Release Manhole for Sanitary Sewer Force Mains	7.09
Standard 4" Sanitary Sewer Tap and Service for Sewer Mains Over 14' Deep	7.10
High Velocity Manhole Invert	7.11
Concrete Encasement for Stream Crossing	7.12
Lift Station Building Elevations	7.13

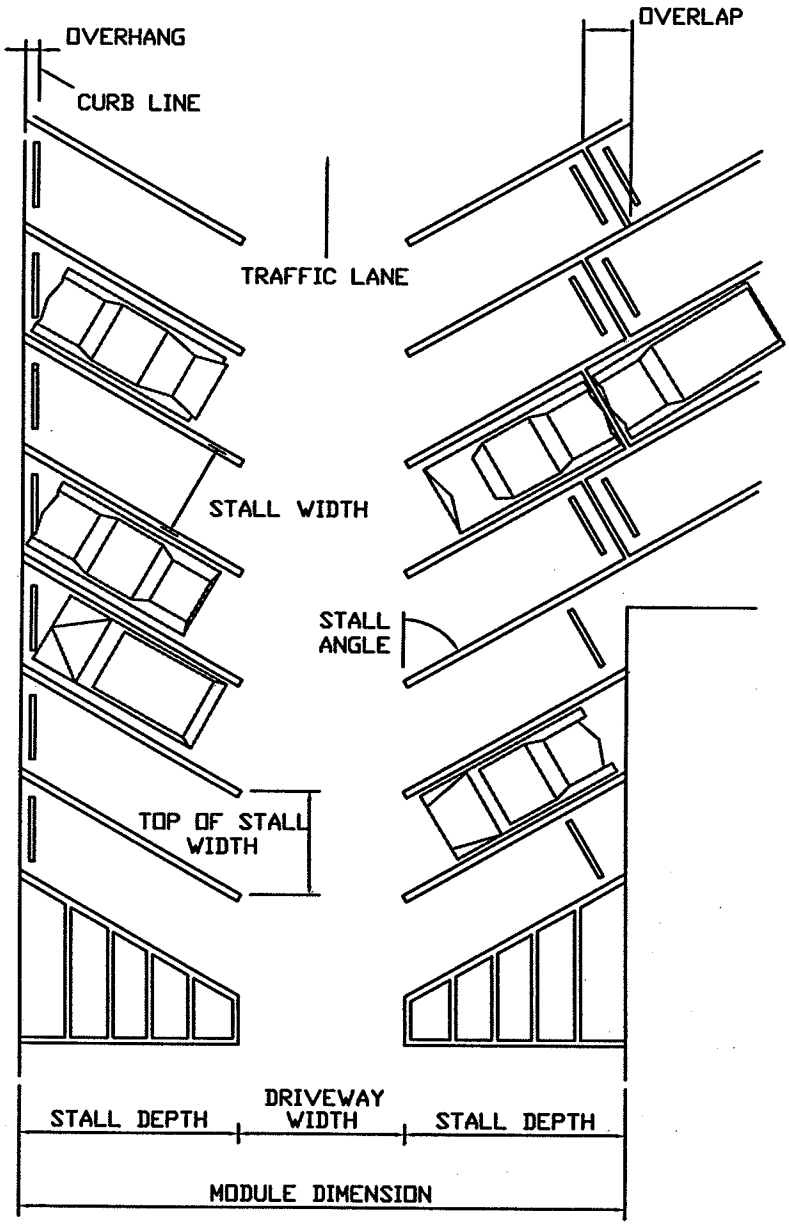

STD. NO.
1.01

PARKING LOT DEFINITIONS

REVISIONS
DATE | DESCRIPTION

CITY OF SHELBY STANDARDS

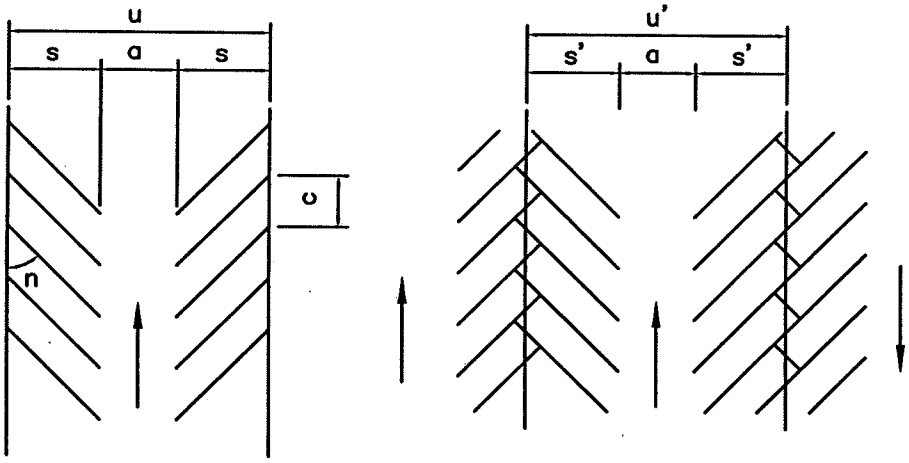

SINGLE UNIT

OVERLAPPING UNITS

n	s	a	c	u	s'
90°	20'–0"	24'–0"	9'–0"	64'–0"	20'–0"
60°	21'–10"	18'–0"	10'–5"	61'–8"	19'–7"
45°	20'–6"	13'–0"	12'–10"	54'–0"	17'–3 1/2"

n	u'
90°	64'–0"
60°	57'–2"
45°	47'–7"

STD. NO. 1.02

PARKING LAYOUT DIMENSIONS

REVISIONS

DATE	DESCRIPTION

CITY OF SHELBY STANDARDS

Shelby NORTH CAROLINA

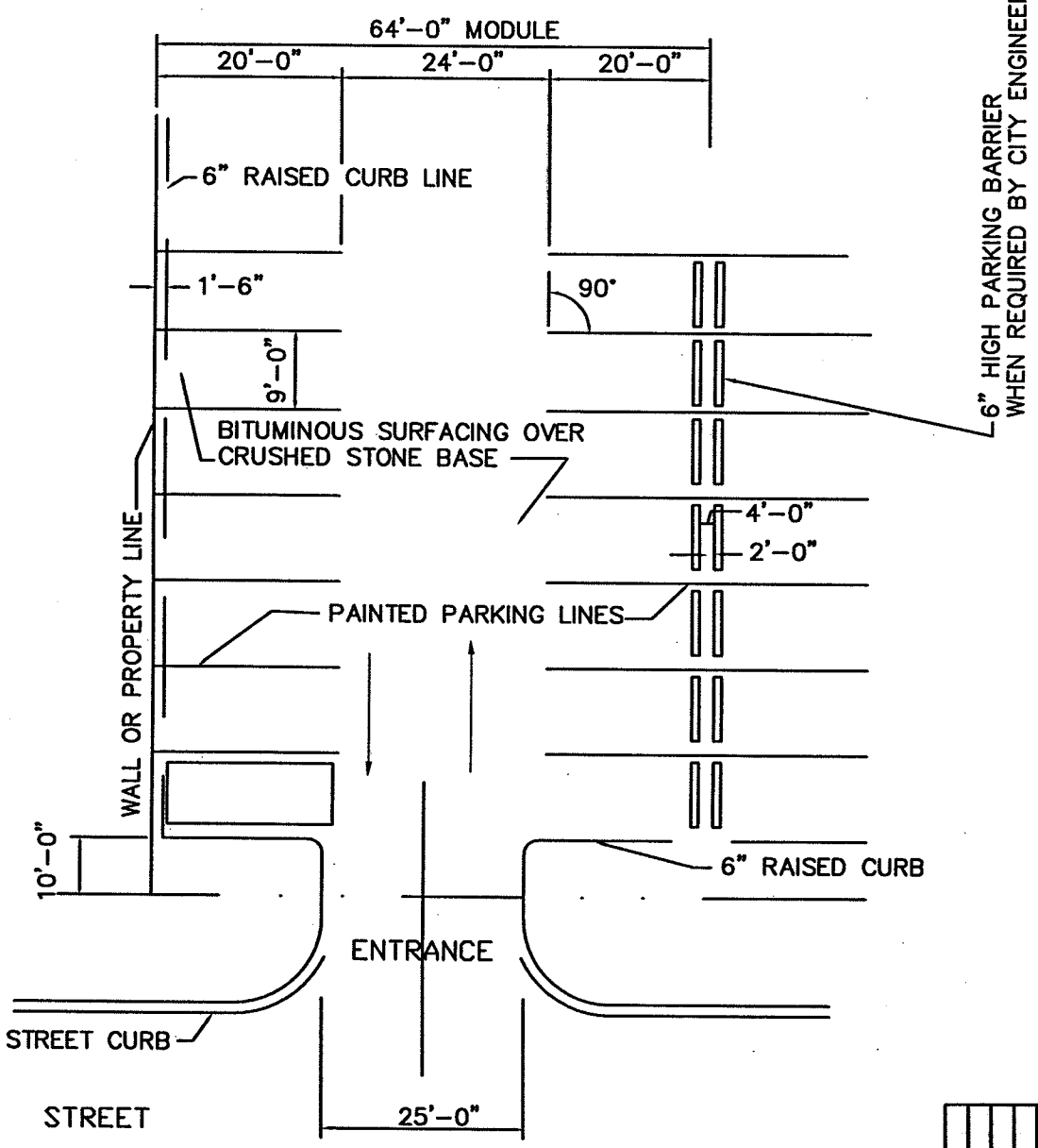

NOTE: ALLOW 4'-0" FOR REAR OVERHANG

STD. NO.
1.03

PARKING PLAN 90° PARKING

REVISIONS	
DATE	DESCRIPTION

CITY OF SHELBY STANDARDS

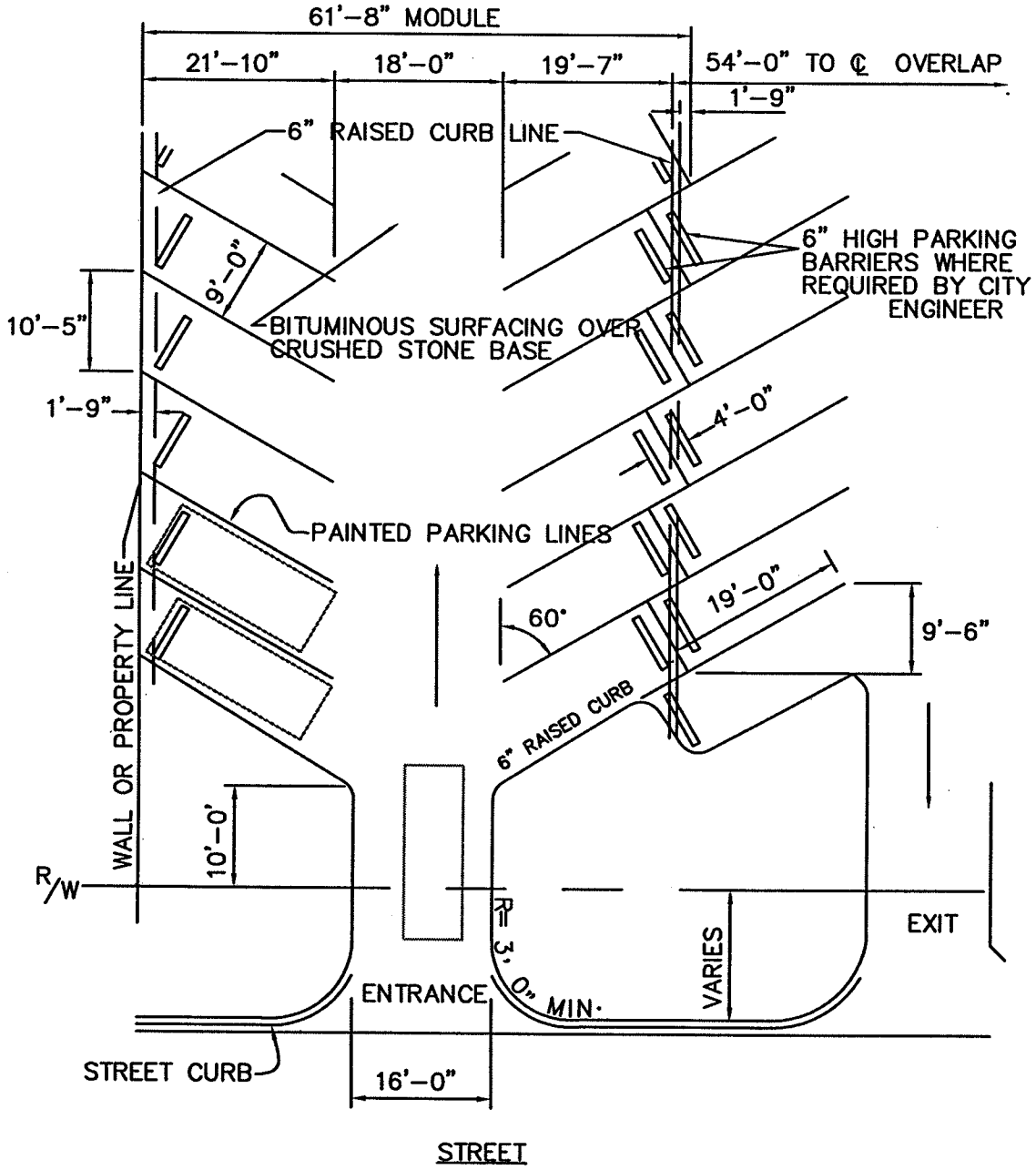

NOTE: ALLOW 3'-9" FOR REAR OVERHANG

NOTE:
24' WIDE AISLES REQUIRED FOR 2-WAY TRAFFIC

STD. NO. 1.04

PARKING PLAN 60° PARKING ONE-WAY MOVEMENT

REVISIONS	
DATE	DESCRIPTION

Shelby NORTH CAROLINA

CITY OF SHELBY STANDARDS

NOTE:
ALLOW 3'-3" FOR
REAR OVERHANG

NOTE:
24' WIDE AISLES
REQUIRED FOR
TWO-WAY TRAFFIC

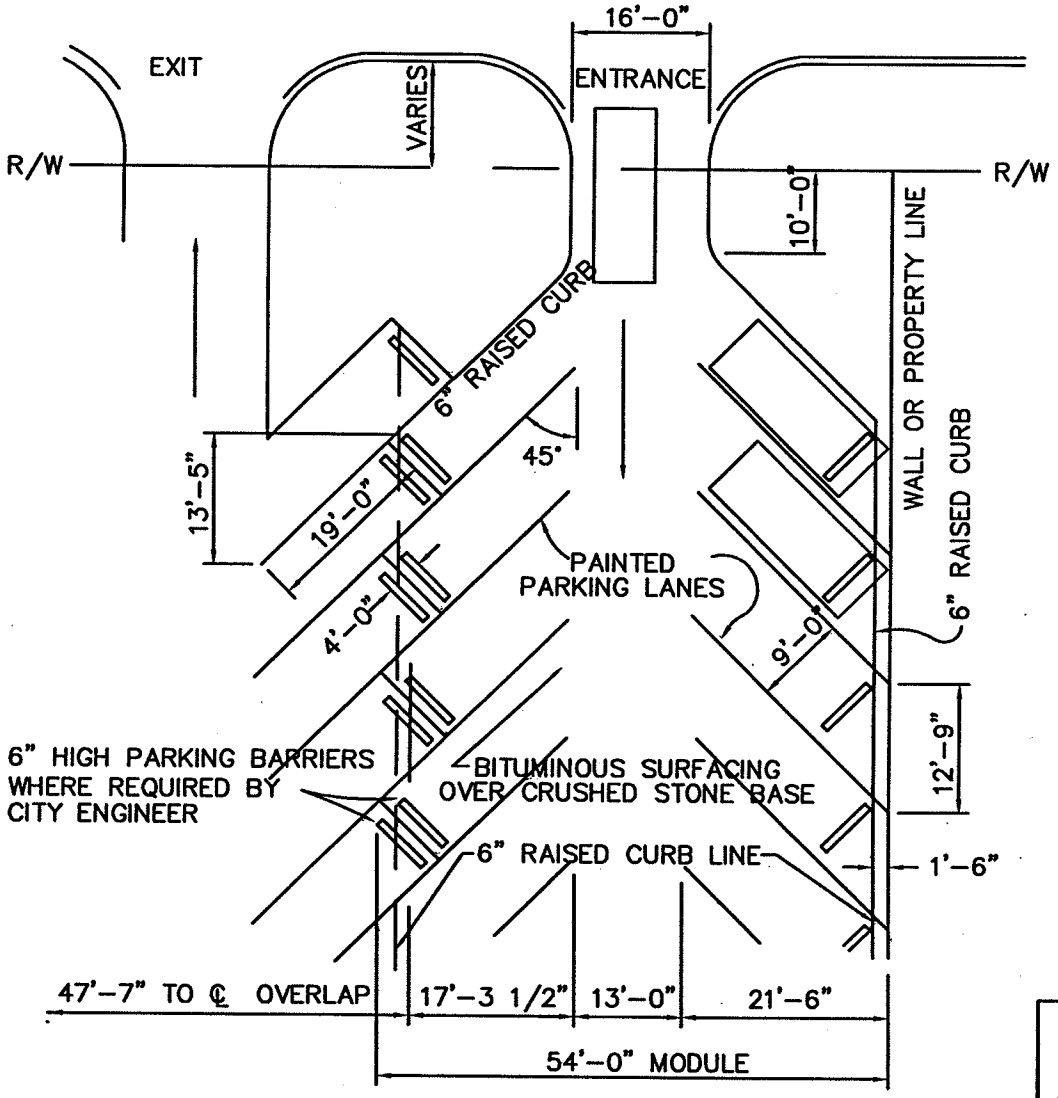

STD. NO.
1.05

PARKING PLAN 45° ANGLE
ONE-WAY MOVEMENT

REVISIONS
DATE
DESCRIPTION

CITY OF SHELBY
STANDARDS

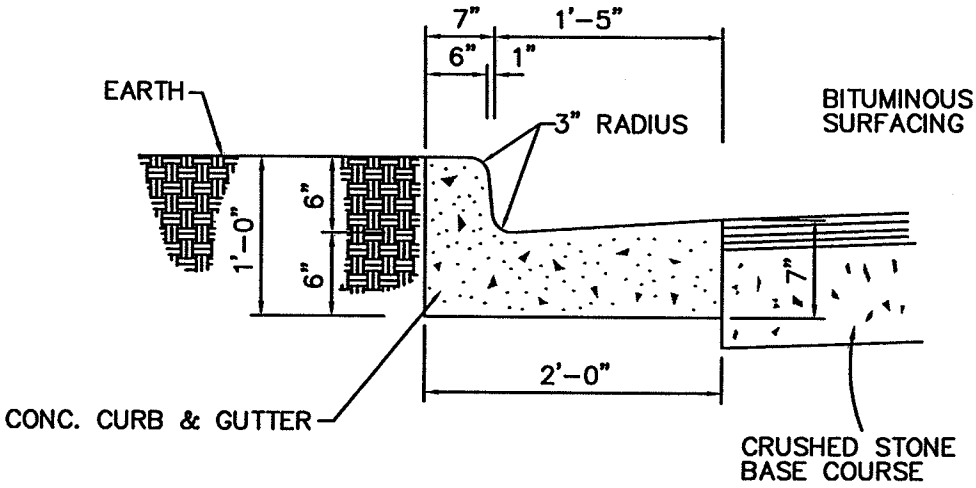

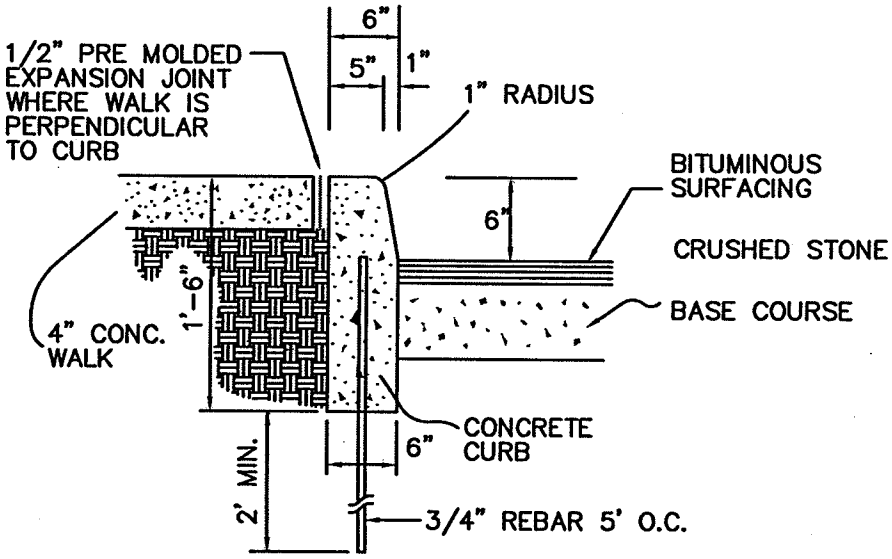

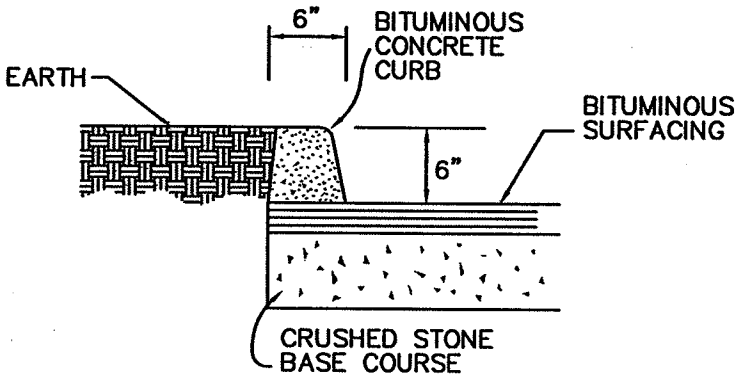

STD. NO. 1.06

TYPICAL CURB SECTIONS FOR PARKING LOT DETAILS

REVISIONS	
DATE	DESCRIPTION

CITY OF SHELBY STANDARDS

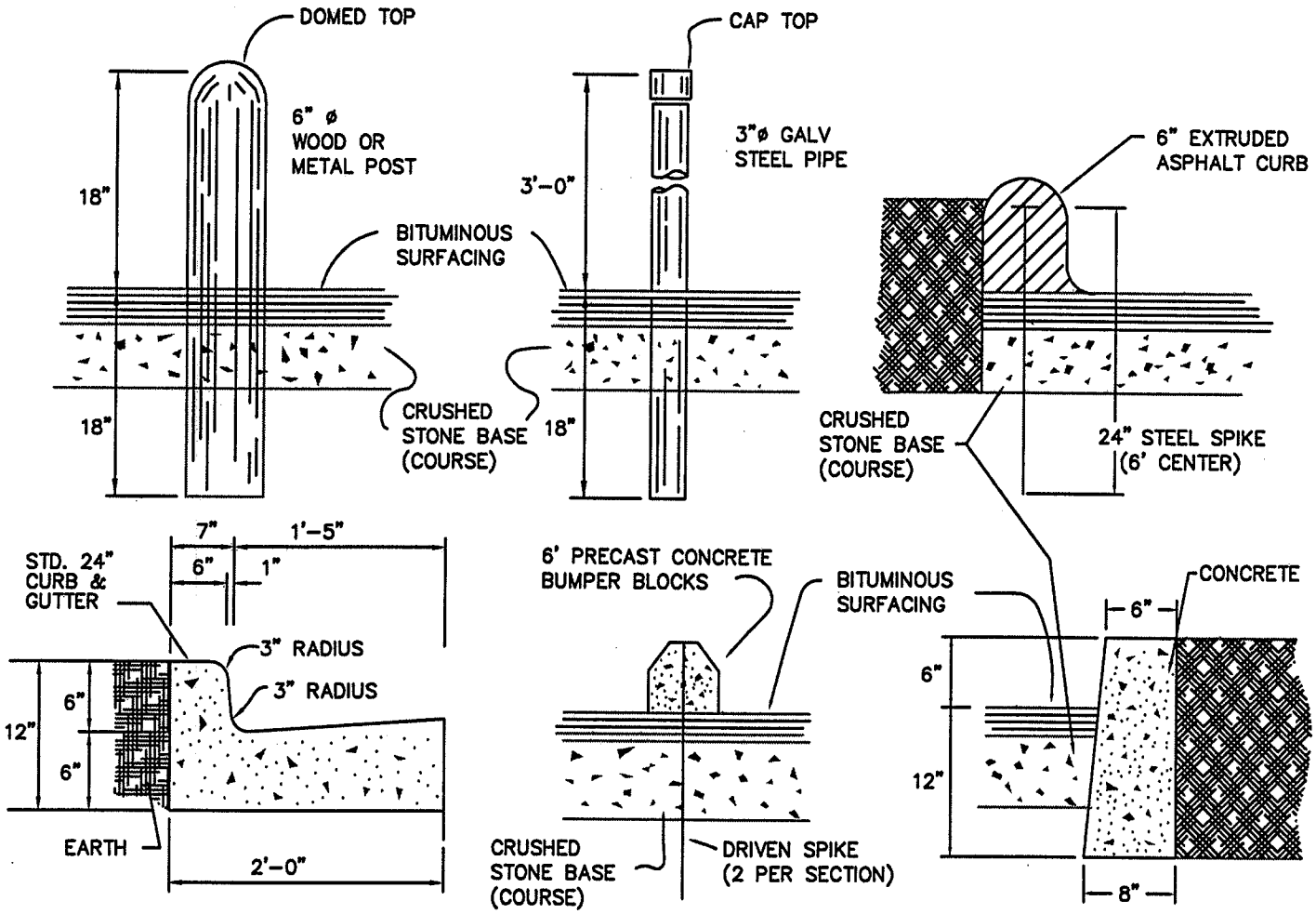

REVISIONS	
DATE	DESCRIPTION

NOTE:
WOOD AND METAL POSTS SHALL NOT BE USED AS MEDIAN BARRIERS OR WHEEL STOPS.

CITY OF SHELBY STANDARDS

Shelby NORTH CAROLINA

PARKING BARRIER SECTIONS

STD. NO.
1.07

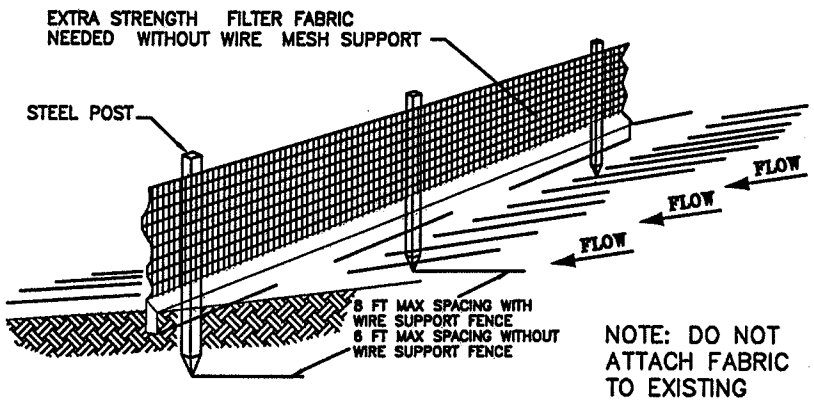

NOTE: DO NOT ATTACH FABRIC TO EXISTING TREES.

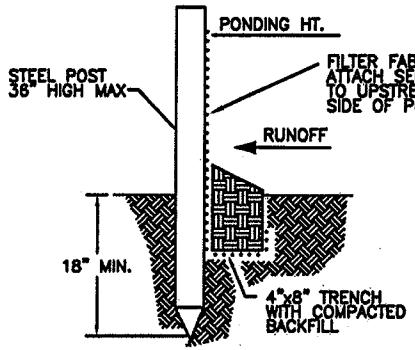

STANDARD DETAIL

TRENCH WITH NATIVE BACKFILL

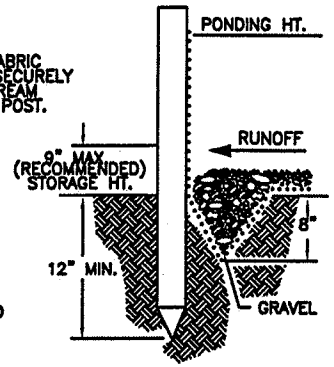

ALTERNATE DETAIL

TRENCH WITH GRAVEL

CONSTRUCTION SPECIFICATIONS

CONSTRUCTION MATERIAL

1. Use synthetic filter fabric or pervious sheet of polypropylene, nylon, polyester, or polyethylene yarn, which is certified by the manufacturer or supplier as having a minimum filtering efficiency of 85%, tensile strength of 30 lb/in (standard) or 50 lb/in (extra strength) at 20% elongation, and a slurry flow rate of 0.3 gal/sq ft. Synthetic fabric should contain ultra-violet ray inhibitors and stabilizers to provide min. 6 months expected usable life at 0–120 deg. F.
2. Ensure that posts are 1.33 lb/ft steel with a minimum length of 4 feet.
3. Use min. 14 gauge wire fence with max mesh spacing of 6".

CONSTRUCTION

1. Ensure height of fence does not exceed 18" above ground surface.
2. Construct fabric from continuous roll cut to length of barrier to avoid joints. When joints are necessary, securely fasten the filter cloth only at a support post with overlap to the next post.
3. Support standard strength fabric with wire mesh fastened securely to upslope side of posts using heavy duty wire staples at least 1" long. Extend wire mesh to bottom of trench.

NOTE:

1. INSPECT AND REPAIR FENCE AFTER EACH STORM EVENT AND REMOVE SEDIMENT WHEN NECESSARY.
2. REMOVED SEDIMENT SHALL BE DEPOSITED TO AN AREA THAT WILL NOT CONTRIBUTE SEDIMENT OFF–SITE AND CAN BE PERMANENTLY STABILIZED.
3. FILTER FABRIC SHALL BE REPLACED WHEN IT HAS DETERIORATED TO SUCH EXTENT THAT IT REDUCES THE EFFECTIVENESS OF THE SILT FENCE. EFFECTIVENESS OF THE SILT FENCE.

REVISIONS	
DATE	DESCRIPTION

CITY OF SHELBY STANDARDS

Shelby NORTH CAROLINA

STANDARD TEMPORARY SILT FENCE DETAIL

STD. NO.

2.01

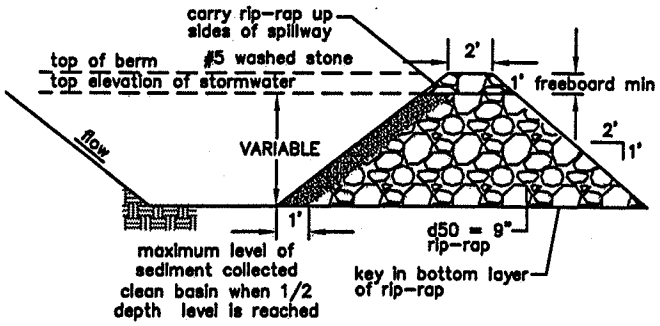

SECTION THROUGH BASIN AND FILTER

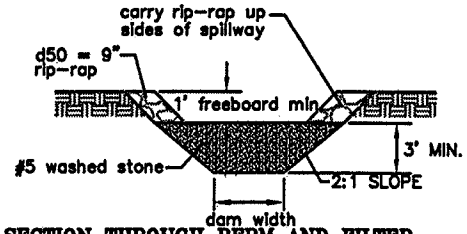

SECTION THROUGH BERM AND FILTER

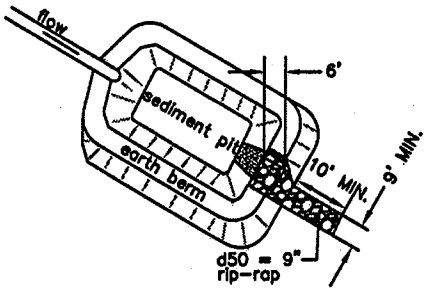

PERSPECTIVE VIEW

CONSTRUCTION SPECIFICATIONS

1. Clear, grub, and strip area of all vegetation and root material. Remove all objectionable material.
2. Ensure fill material is free of objectionable material. Place fill in 6" lifts and machine compact.
3. Protect connection between riprap and soil by using filter fabric. Extend fabric across spillway foundation and sides to top of dam.
4. Clear pond area below dam for sediment cleanout.
5. All cut and fill slopes should be 2:1 or flatter.
6. Ensure stone section has min. bottom width of 3' with max side slopes of 2:1.
7. Ensure weir is level and constructed to grade.
8. Material used in stone section should be well-graded mixture of stone with d50 size of 9" and max size of 14".
9. Ensure spillway extends past toe of embankment until stable conditions are reached. Keep edges of stone outlet flush with surrounding ground and shape center to confine outlet stream.
10. Direct emergency bypass to natural, stable areas.
11. Stabilize embankment and all disturbed areas immediately after construction, including embankment, emergency spillway, above the sediment pool and downstream.
12. Mark cleanout level in field.

REVISIONS	
DATE	DESCRIPTION

CITY OF SHELBY STANDARDS

Shelby NORTH CAROLINA

STANDARD TEMPORARY SEDIMENT TRAP

STD. NO.

2.02

CONSTRUCTION SPECIFICATIONS

1. Place two concrete blocks on their sides perpendicular to the curb at either end of the inlet opening. These will serve as space blocks.
2. Place concrete blocks on their sides across the front of the inlet and abutting the spacer blocks. The openings in the blocks should face outward, not upward.
3. Cut a 2– by 4–inch stud the length of the curb inlet plus the width of the two spacer blocks. Place the stud through the outer hole of each spacer block to help keep the front blocks in place.
4. Place wire mesh over the outside vertical face (open ends) of the concrete blocks to prevent stone from being washed through the blocks. Use chicken wire, hardwire cloth with 1/2 inch openings, or filter fabric.
5. Place 3/4 inch to 1–1/3 inch gravel against the wire to the top of the barrier.

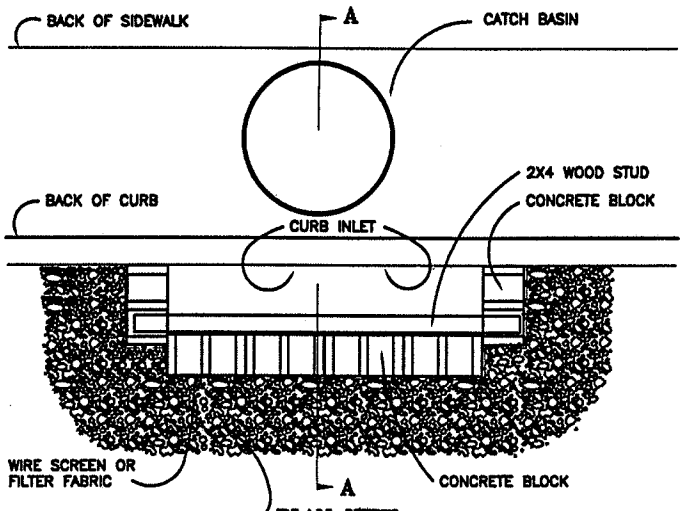

PLAN VIEW

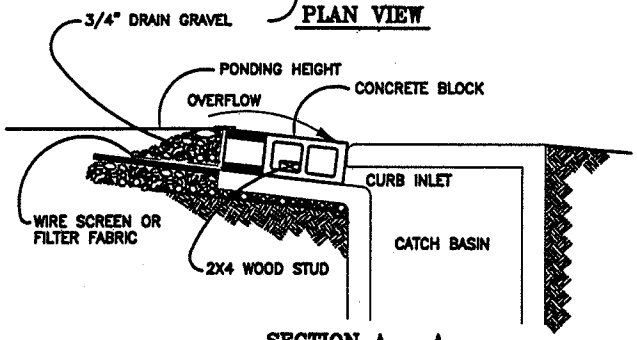

SECTION A – A

NOTES:
1. USE BLOCK AND GRAVEL TYPE SEDIMENT BARRIER WHEN CURB INLET IS LOCATED IN GENTLY SLOPING STREET SEGMENT, WHERE WATER CAN POND AND ALLOW SEDIMENT TO SEPARATE FROM RUNOFF.
2. BARRIER SHALL ALLOW FOR OVERFLOW FROM SEVERE STORM EVENT.
3. INSPECT BARRIERS AND REMOVE SEDIMENT AFTER EACH STORM EVENT. SEDIMENT AND GRAVEL MUST BE REMOVED FROM THE TRAVELED WAY IMMEDIATELY.

REVISIONS	
DATE	DESCRIPTION

CITY OF SHELBY STANDARDS

Shelby NORTH CAROLINA

CURB INLET SEDIMENT FILTER

STD. NO.
2.03

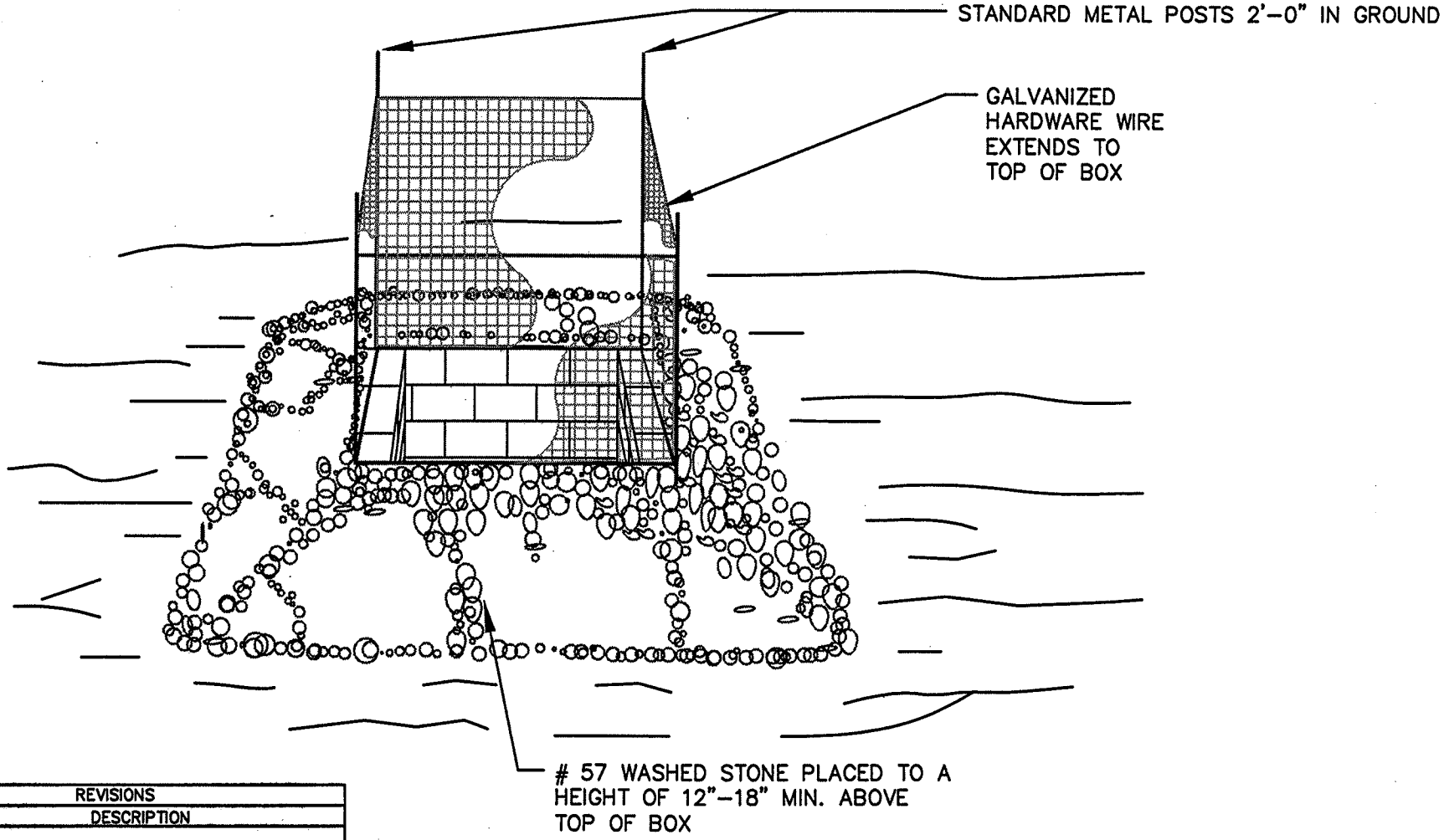

REVISIONS	
DATE	DESCRIPTION

CITY OF SHELBY STANDARDS

Shelby NORTH CAROLINA

YARD INLET SEDIMENT FILTER

STD. NO.

2.04

NOTES:

1. THE ENTRANCE SHALL BE MAINTAINED IN A CONDITION THAT WILL PREVENT TRACKING OR FLOWING OF SEDIMENT ONTO PUBLIC RIGHTS-OF-WAY. THIS MAY REQUIRE TOP DRESSING, REPAIR AND/OR CLEANOUT OF ANY MEASURES USED TO TRAP SEDIMENT.
2. WHEN NECESSARY, WHEELS SHALL BE CLEANED PRIOR TO ENTRANCE ONTO PUBLIC RIGHT-OF-WAY.
3. WHEN WASHING IS REQUIRED, IT SHALL BE DONE ON AN AREA STABILIZED WITH CRUSHED STONE THAT DRAINS INTO AN APPROVED SEDIMENT TRAP OR SEDIMENT BASIN.

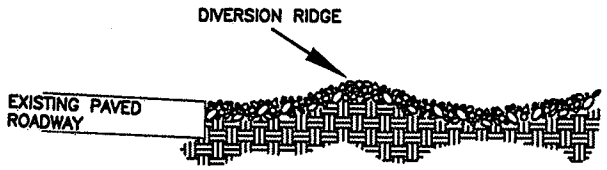

SECTION A - A

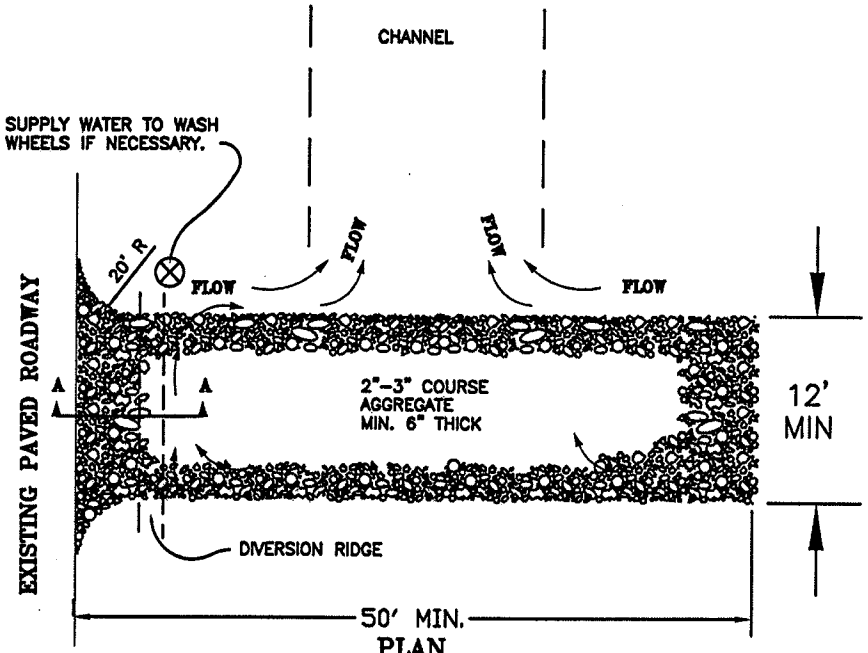

PLAN

CONSTRUCTION SPECIFICATIONS

1. Clear the entrance and exit area of all vegetation, roots, and other objectionable material and properly grade it.
2. Place the gravel to the specific grade and dimensions shown on the plans, and smooth it.
3. Provide drainage to carry water to the sediment trap.

REVISIONS	
DATE	DESCRIPTION

CITY OF SHELBY STANDARDS

Shelby NORTH CAROLINA

TEMPORARY CONSTRUCTION ENTRANCE

STD. NO.

2.05

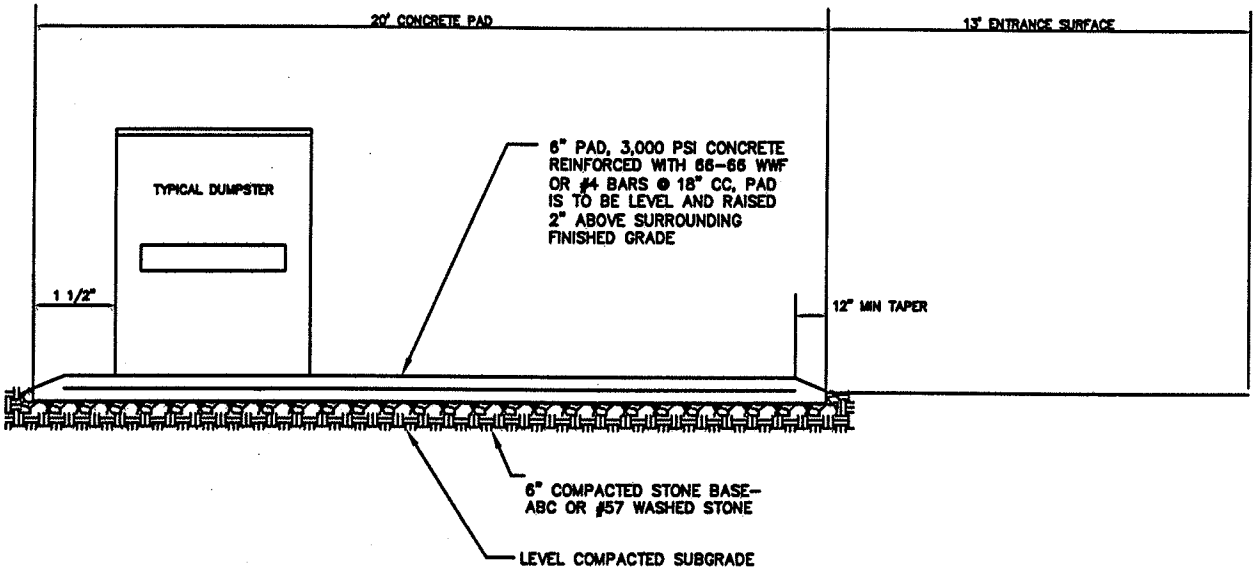

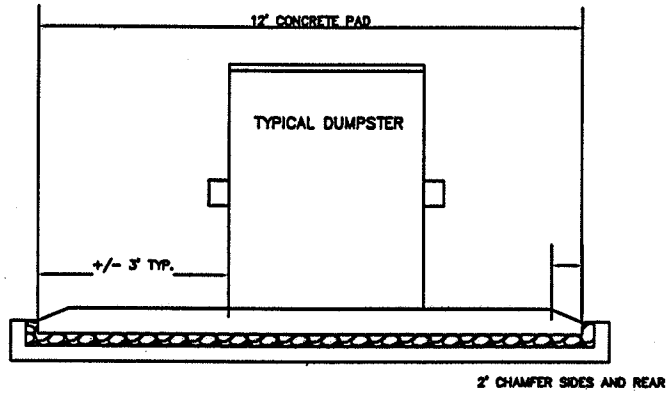

GENERAL NOTES:

1. NO OBSTRUCTIONS SHALL BE PERMITTED WITHIN 23' ABOVE DUMPSTER PAD OR ENTRANCE.

REVISIONS	
DATE	DESCRIPTION

CITY OF SHELBY STANDARDS

Shelby NORTH CAROLINA

DUMPSTER PAD DETAIL

STD. NO.

2.06

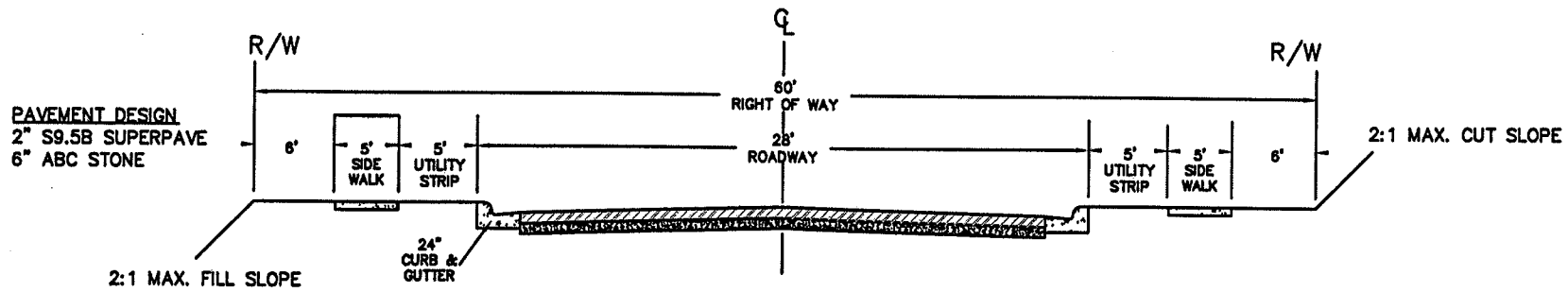

RESIDENTIAL COLLECTOR RD

60' RIGHT OF WAY
28' ROADWAY WIDTH

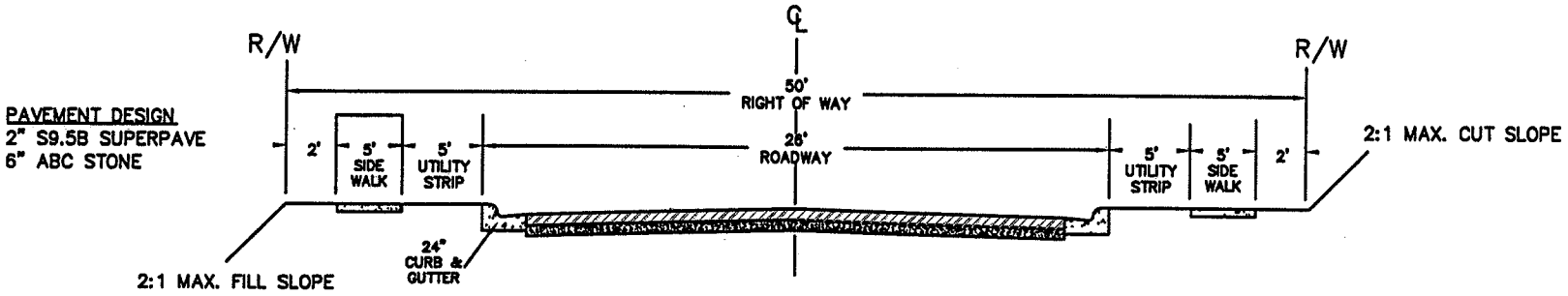

LOCAL RESIDENTIAL RD

50' RIGHT OF WAY
26' ROADWAY WIDTH

NOTE:
1. NORMAL CROWN OF 1/4" PER FOOT ON ROADWAY AND SHOULDER UNLESS OTHERWISE DIRECTED BY CITY ENGINEER.
2. SUBGRADE SHALL BE COMPACTED TO 95% STANDARD PROCTOR DENSITY.
3. 3:1 SLOPE RECOMMENDED ON BOTH CUT AND FILL SLOPES.
4. UTILITY EASEMENTS MAY BE REQUIRED BY THE CITY OF SHELBY UTILITY DEPARTMENT AS DEEMED NECESSARY.

REVISIONS	
DATE	DESCRIPTION

CITY OF SHELBY STANDARDS

Shelby NORTH CAROLINA

STANDARD STREET SECTION

STD. NO.
3.01

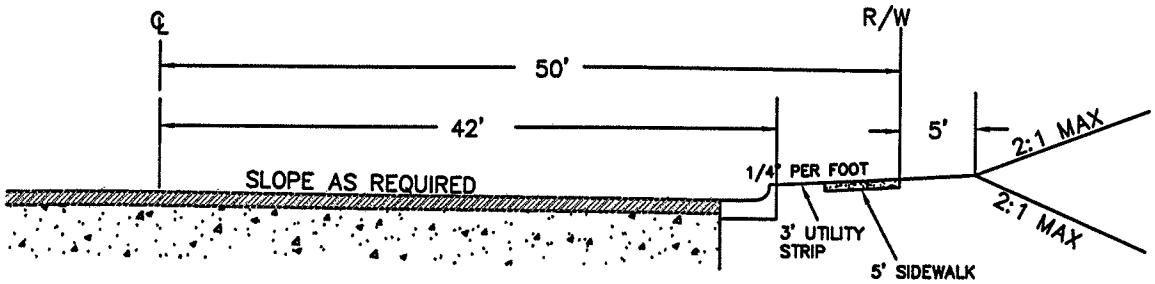

SECTION "A–A"

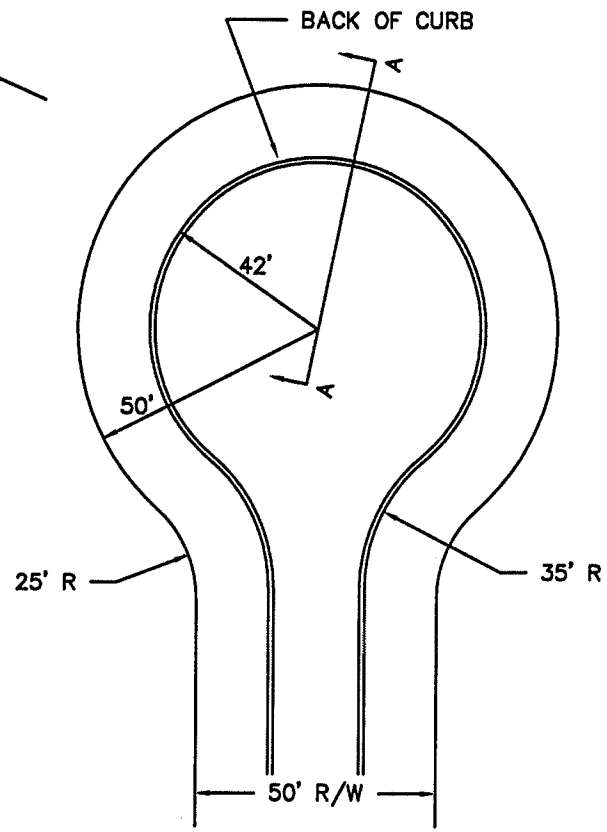

PAVEMENT DESIGN
2" SUPERPAVE S9.5B
6" ABC STONE

REVISIONS	
DATE	DESCRIPTION

CITY OF SHELBY STANDARDS

LOCAL RESIDENTIAL CUL-DE-SAC: SYMMETRICAL WITH CURB & GUTTER

STD. NO.
3.02

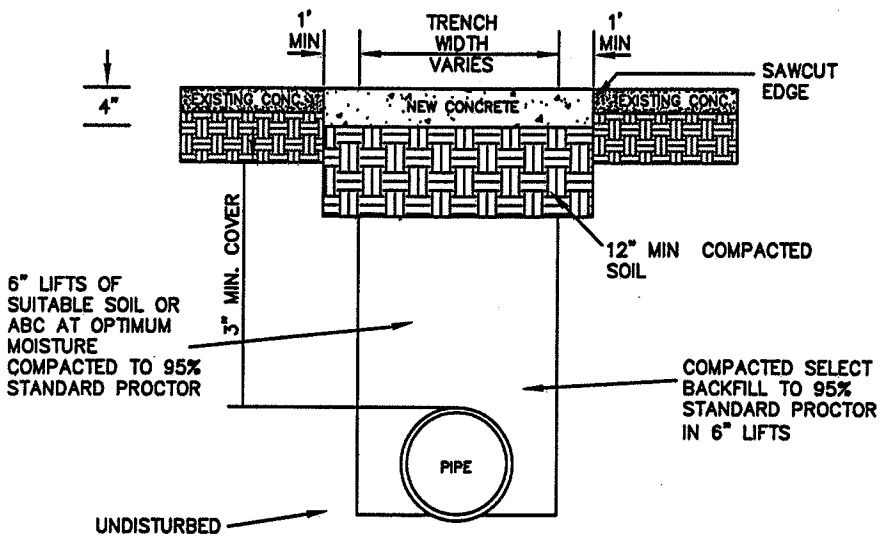

CONCRETE PAVEMENT REPAIR
NTS

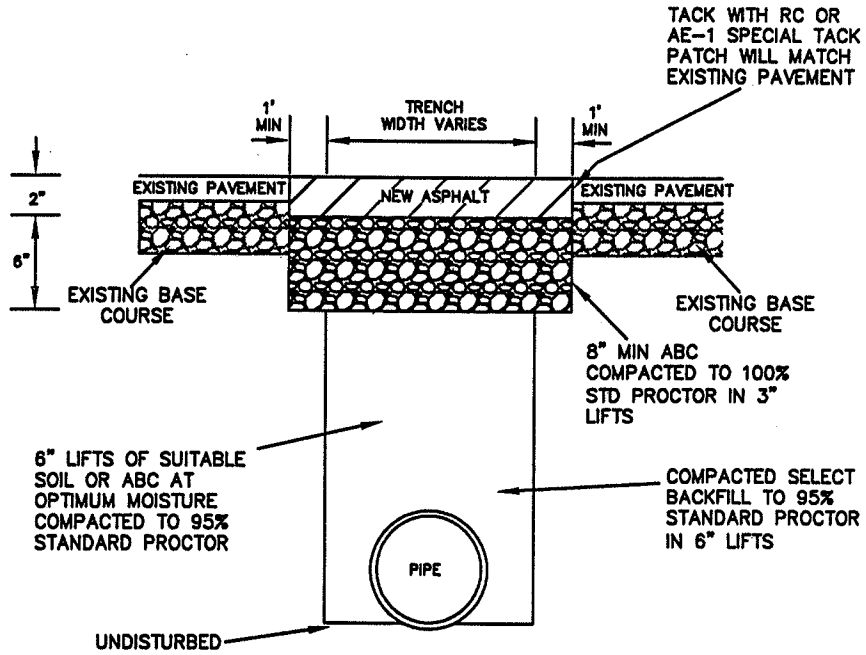

ASPHALT PAVEMENT REPAIR
NTS

ALL PAVEMENT CUTS SHALL BE REPAIRED WITHIN A MAXIMUM OF SEVEN (7) DAYS FROM THE DATE THE CUT IS MADE. IF CONDITIONS DO NOT PERMIT A PERMANENT REPAIR WITHIN THE GIVEN TIME LIMIT. PERMISSION TO MAKE A TEMPORARY REPAIR MUST BE OBTAINED FROM THE CITY ENGINEER

REVISIONS	
DATE	DESCRIPTION

CITY OF SHELBY STANDARDS

Shelby NORTH CAROLINA

STANDARD TRENCH AND PAVEMENT REPAIR SECTIONS

STD. NO.
3.03

NOTE: ONLY GRASS TO BE PLANTED
IN UTILITY STRIP

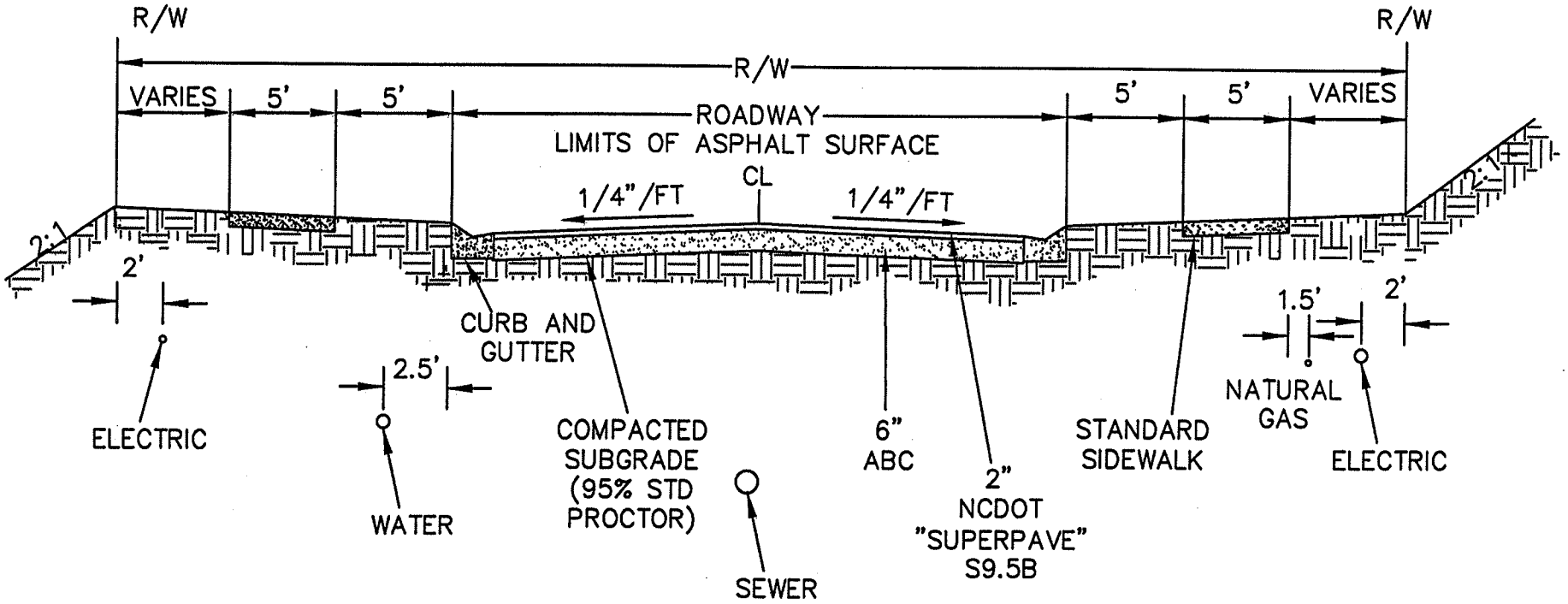

NOTE: UTILITY EASEMENTS MAY BE REQUIRED BY
THE CITY OF SHELBY UTILITY DEPARTMENT AS DEEMED NECESSARY.

MINIMUM HORIZONTAL DISTANCE BETWEEN ELECTRIC
AND NATURAL GAS IS THREE (3) FEET

REVISIONS	
DATE	DESCRIPTION

CITY OF SHELBY STANDARDS

Shelby NORTH CAROLINA

STANDARD UTILITY CORRIDOR

STD. NO.
3.04

NOTE:
ADDITIONAL R/W MAY BE REQUIRED TO ACCOMMODATE TAPERS, TURN LANES, AND MEDIAN ISLANDS

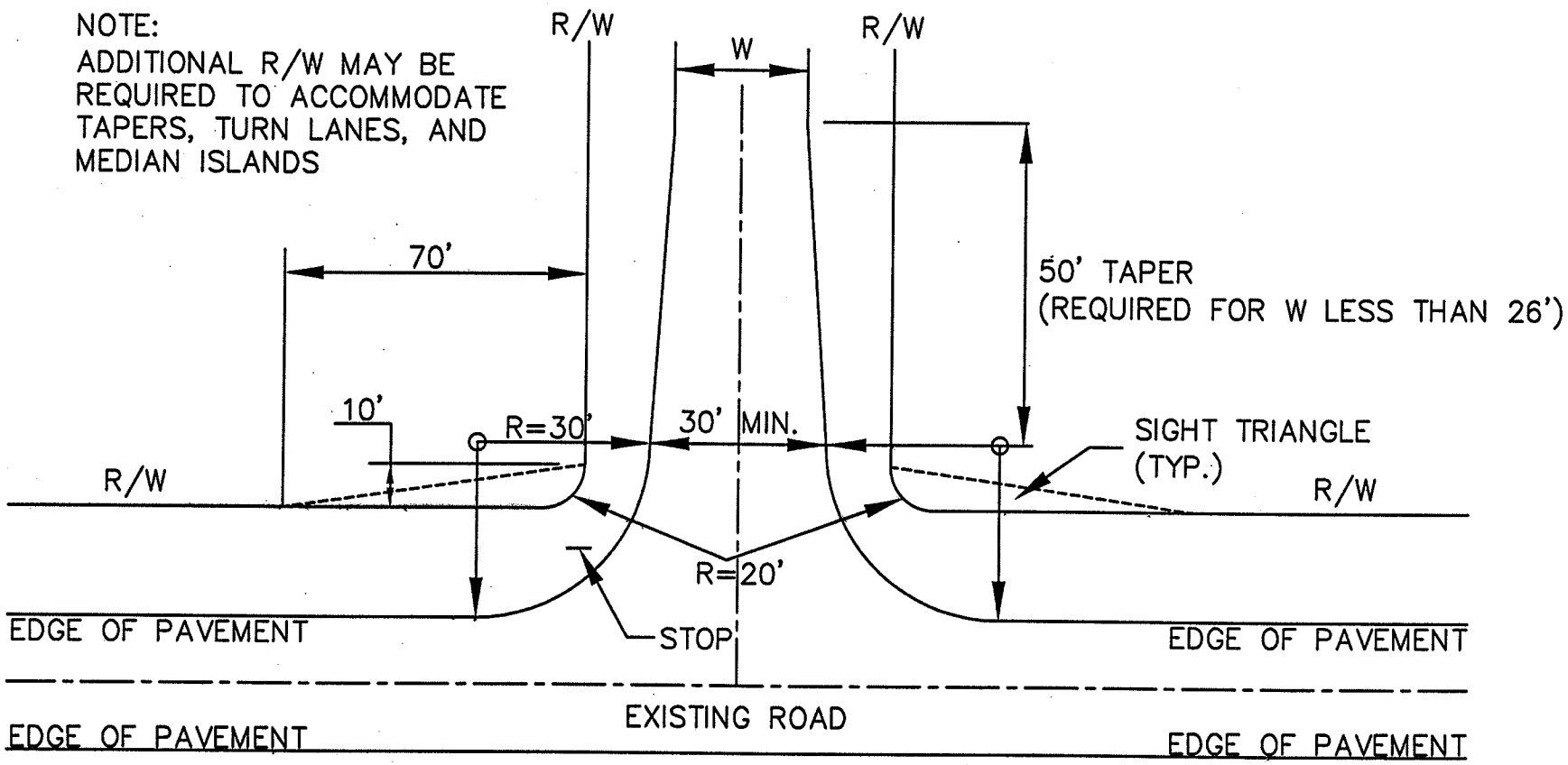

**NOTE: PERMANENT DRAINAGE EASEMENTS MAY BE REQUIRED TO ACCOMMODATE DRAINAGE BEYOND THE RIGHT-OF-WAY

REVISIONS	
DATE	DESCRIPTION

CITY OF SHELBY STANDARDS	**STREET INTERSECTION TURN**	STD. NO. 3.05

Classificaton	Min. Design Speed (MPH)	Horizontal Curve Controls			Vertical Curve "K" VALUE	
		Max. Super Elevation (ft./ft.)	Minimum Radius (ft.)	Maximum Grade (%)	Length Crest (ft.)	Length Sag (ft.)
RESIDENTIAL COLLECTOR RD	35	NC	310'	8	45	45
LOCAL RESIDENTIAL SUBDIVISION RD	30	NC	230'	8	30	30

NOTES:

DESIGN SPEED SHALL NOT BE LESS THAN 5 MPH GREATER THAN THE POSTED SPEED.

NC = NORMAL CROWN, A PARABOLIC CROWN WITH AN AVERAGE CROSS SLOPE OF 1/4" PER FOOT MEASURED OUTWARD FROM THE CENTERLINE.

THIS TABLE OUTLINES MINIMUMS FOR ROADWAY DESIGN. SOUND ENGINEERING JUDGMENT SHOULD BE EXERCISED WHEN USING MINIMUM DESIGN STANDARDS FOR ROADS. ALTERNATE DESIGNS SHALL BE IN ACCORDANCE WITH THE NCDOT ROADWAY DESIGN MANUAL OR A POLICY ON GEOMETRIC DESIGN OF HIGHWAYS AND STREETS, LATEST EDITION PUBLISHED BY AASHTO.

REVISIONS	
DATE	DESCRIPTION

CITY OF SHELBY STANDARDS

Shelby NORTH CAROLINA

PUBLIC STREET GEOMETRIC STANDARDS

STD. NO.

3.06

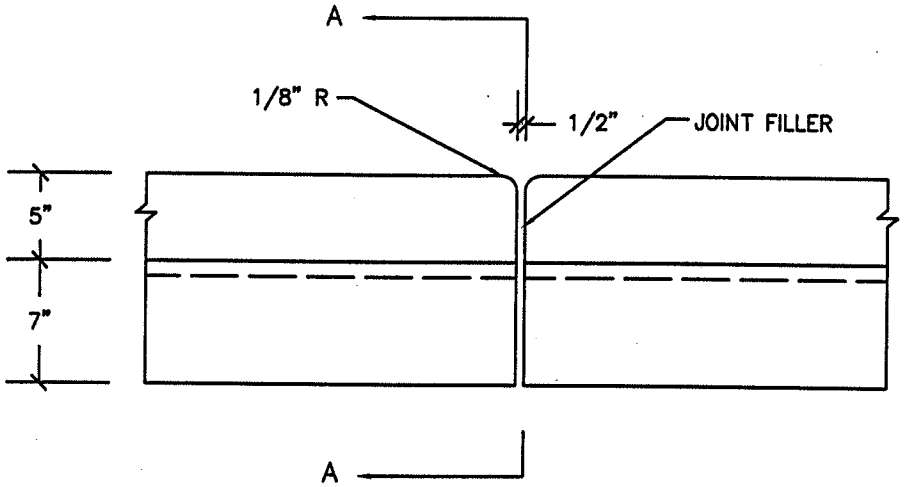

FRONT ELEVATION
TRANVERSE EXPANSION JOINT

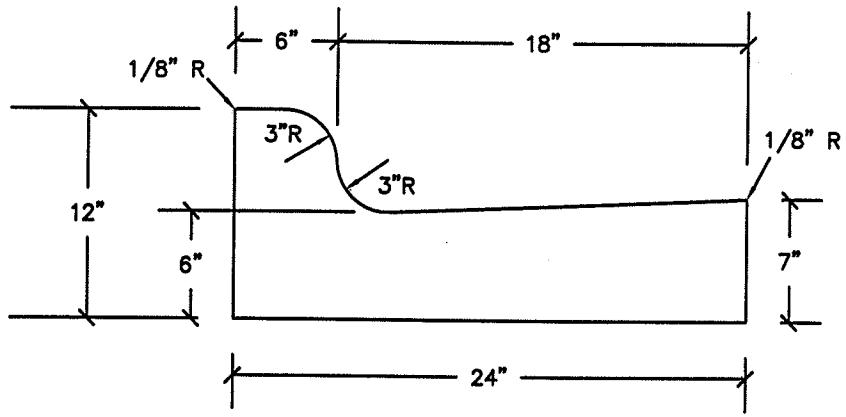

SECTION A–A
SIDE ELEVATION

COMBINATION CURB & GUTTER

NOTE:
1. CONCRETE SHALL BE 3000 PSI.
2. FOR HAND POURED CURBING, CONTRACTION JOINTS SHALL BE SPACED AT 10' INTERVALS & EXPANSION JOINTS SHALL BE PLACED AT 50' INTERVALS.
3. FOR EXTRUDED CURBING, CONTRACTION JOINTS SHALL BE SPACED AT 15' INTERVALS & EXPANSION JOINTS SHALL BE PLACED AT 90' INTERVALS.
4. FINISH ALL CONCRETE WITH CURING COMPOUND.
5. FOLLOW ALL APPLICABLE ACI REQUIREMENTS.
6. CONSTRUCTION METHODS AND MATERIALS SHALL CONFORM TO NORTH CAROLINA DOT STANDARD SPECIFICATIONS FOR ROADS AND STRUCTURES SECTION 846.

REVISIONS	
DATE	DESCRIPTION

CITY OF SHELBY STANDARDS

Shelby NORTH CAROLINA

STANDARD CONCRETE CURB AND GUTTER

STD. NO.
4.01

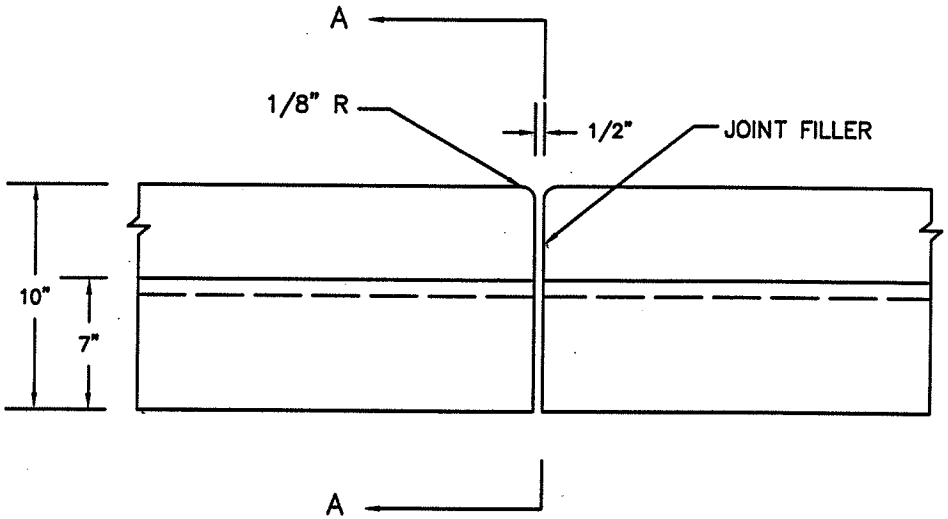

FRONT ELEVATION
TRANVERSE EXPANSION JOINT

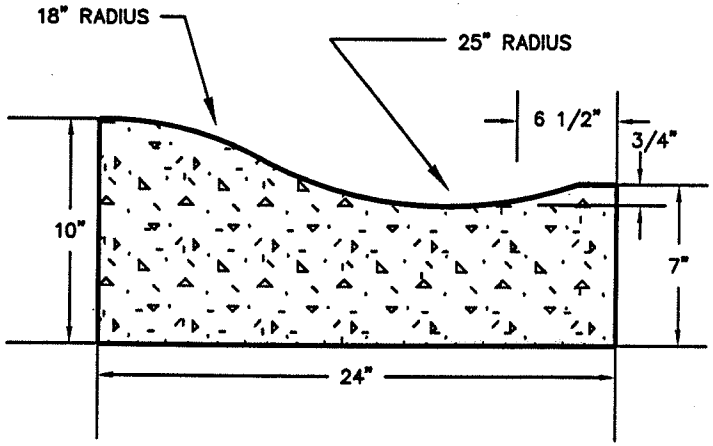

SECTION A–A
SIDE ELEVATION

COMBINATION CURB & GUTTER

NOTE:
1. CONCRETE SHALL BE 3600 PSI.
2. FOR HAND POURED CURBING, CONTRACTION JOINTS SHALL BE SPACED AT 10' INTERVALS & EXPANSION JOINTS SHALL BE PLACED AT 50' INTERVALS.
3. FOR EXTRUDED CURBING, CONTRACTION JOINTS SHALL BE SPACED AT 15' INTERVALS & EXPANSION JOINTS SHALL BE PLACED AT 90' INTERVALS.
4. FINISH ALL CONCRETE WITH CURING COMPOUND.
5. FOLLOW ALL APPLICABLE ACI REQUIRMENTS.
6. CURB SHALL BE DEPRESSED AT INTERSECTIONS TO PROVIDE FOR FUTURE ACCESSIBLE RAMPS.
7. TOP 6" OF SUBGRADE BENEATH THE C&G SHALL BE COMPACTED 100% STANDARD PROCTOR DENSITY.
8. CURB JOINTS SHALL LINE UP WITH THE JOINTS ON THE ABUTTING SIDEWALK

REVISIONS	
DATE	DESCRIPTION

CITY OF SHELBY STANDARDS

Shelby NORTH CAROLINA

MOUNTABLE OR VALLEY CURB AND GUTTER

STD. NO.
4.02

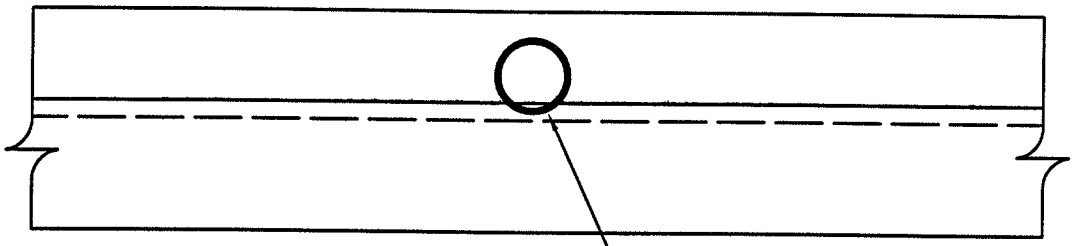

3" ø SOLID PVC PIPE THROUGH CURB.
THE EDGES OF THE DRAIN HOLE MUST BE ROUNDED AND FINISHED SMOOTH AT THE FACE OF THE CURB.

NOTES:

1. CURB DRAINS SHALL NOT BE CONSTRUCTED WITHIN 18" OF CONTRACTION OR EXPANSION JOINTS.

2. OPENING GRADE MAY VARY BETWEEN A MAXIMUM SLOPE OF 1/2" PER FOOT AND A MINIMUM OF 1/4" PER FOOT.

3. MORE THAN ONE HOLE MAY BE INSTALLED PROVIDED THE HOLES ARE LOCATED WITH 18" MINIMUM SPACING.

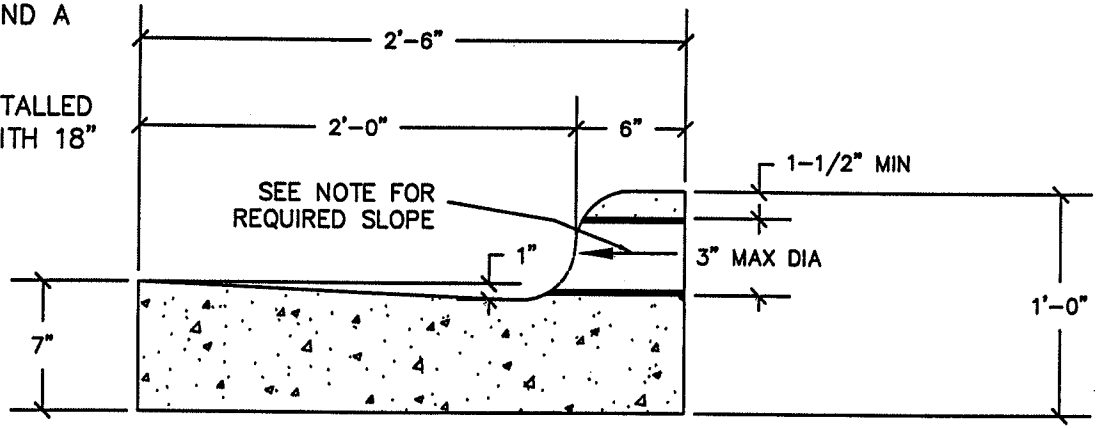

REVISIONS	
DATE	DESCRIPTION

CITY OF SHELBY STANDARDS

STANDARD CURB DRAIN

STD. NO.

4.03

STREET WIDTH	A	B	C	FALL TOWARDS STREET
32' B-B	3'	5'	2'	1/2" PER 1'
28' B-B	3'	5'	2'	1/2" PER 1'

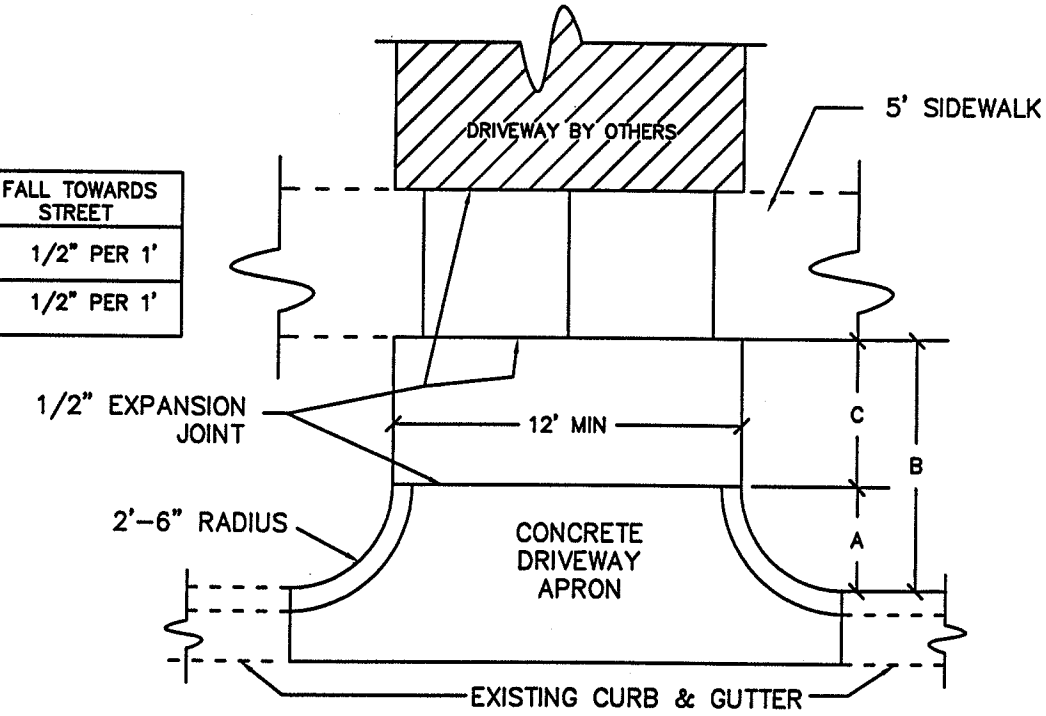

PLAN VIEW

NOTES TO CONTRACTOR:
1. RESIDENTIAL DRIVEWAYS TO BE 12' TO 16' IN WIDTH.
2. ALL CONCRETE SHALL BE 3000 PSI.
3. IF CURB CUT IS WITHIN 5' FROM A JOINT, THEN THE CUT SHALL BE MADE AT THAT JOINT.
4. ALL DRIVEWAYS SHALL BE INSTALLED WITH A SIDEWALK SECTION AND UTILITY STRIP AS SHOWN. SIDEWALK SECTIONS SHALL HAVE 1/4" PER FOOT FALL TOWARDS THE STREET.

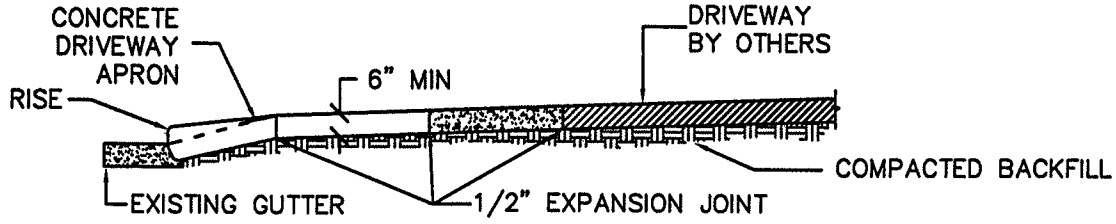

SECTION VIEW

REVISIONS	
DATE	DESCRIPTION

CITY OF SHELBY STANDARDS

Shelby NORTH CAROLINA

STANDARD RESIDENTIAL DRIVEWAY APRON

STD. NO.

4.04A

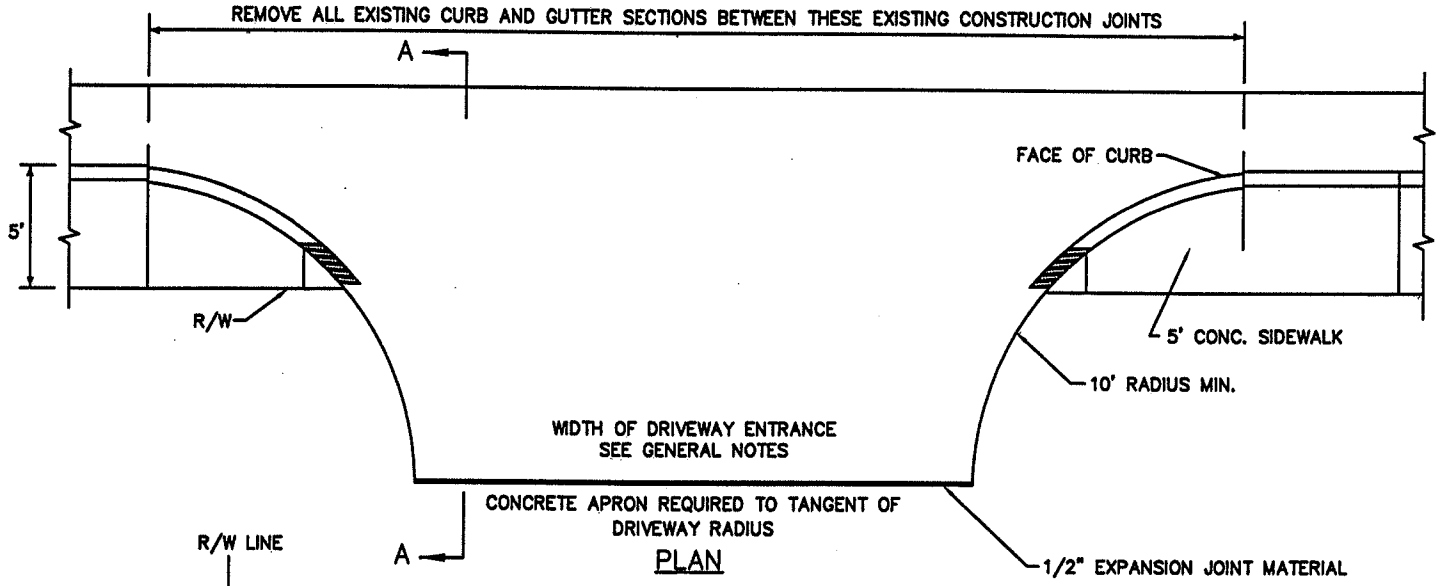

PLAN

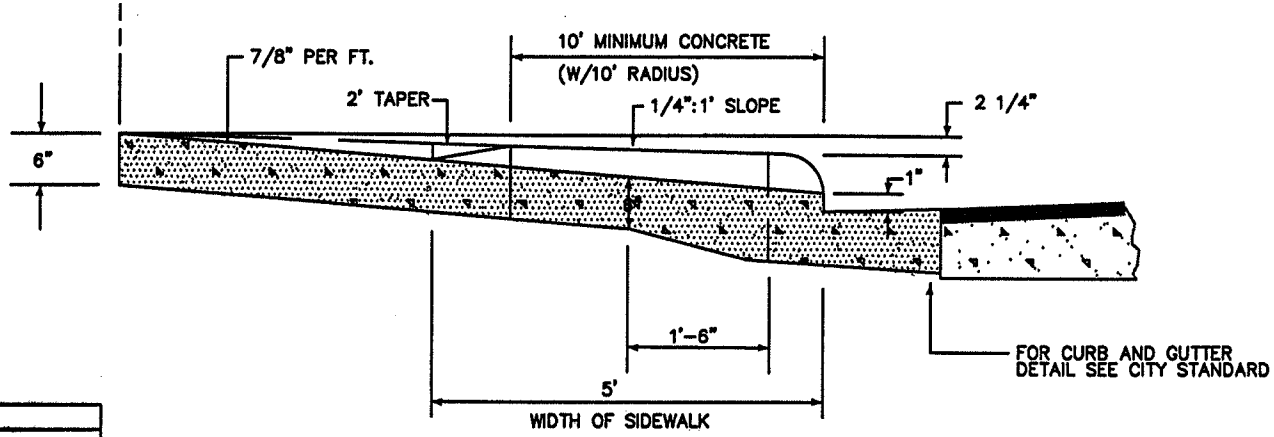

SECTION A–A

REVISIONS	
DATE	DESCRIPTION

CITY OF SHELBY STANDARDS

Shelby NORTH CAROLINA

INDUSTRIAL OR COMMERCIAL CONCRETE DRIVEWAY ENTRANCE (10' RADIUS)

STD. NO.

4.04B

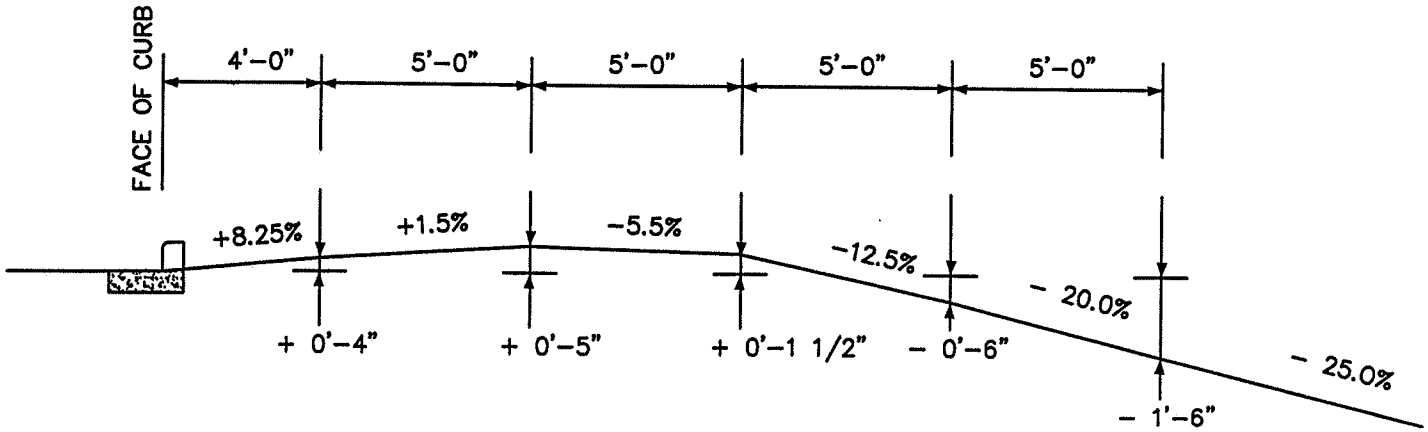

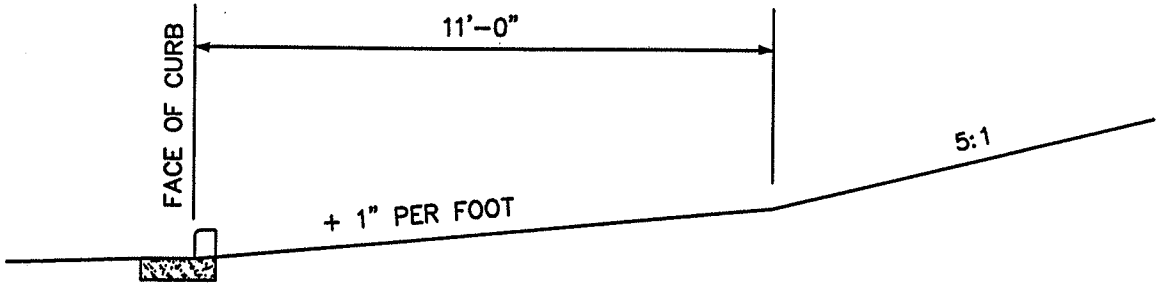

REVISIONS	
DATE	DESCRIPTION

NOTE:
GRADES SHOWN ABOVE ARE MAXIMUM ALLOWABLE GRADES.

CITY OF SHELBY STANDARDS

Shelby NORTH CAROLINA

GRADES FOR STANDARD DRIVEWAY ENTRANCES

STD. NO.
4.04C

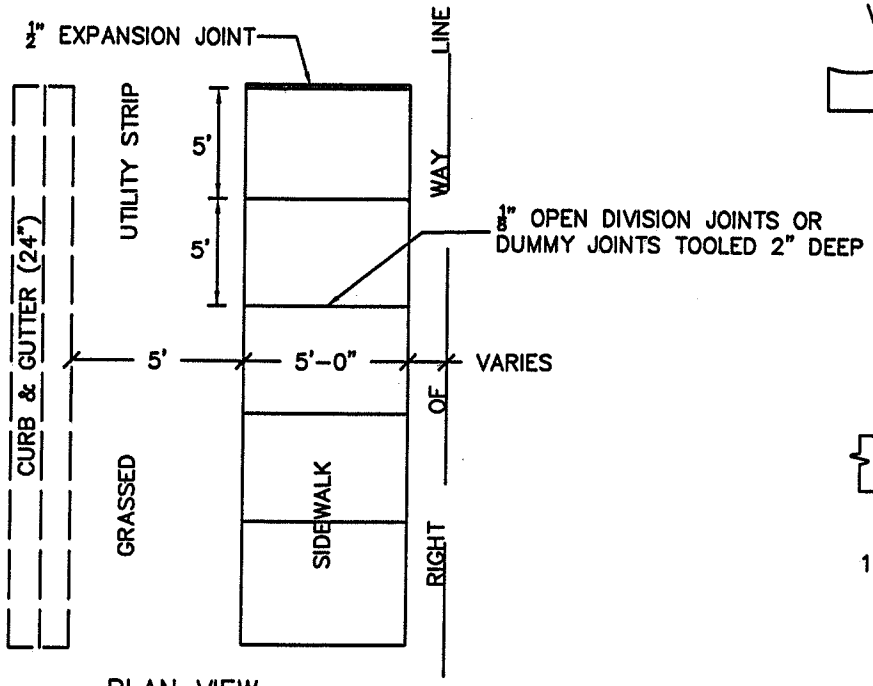

PLAN VIEW

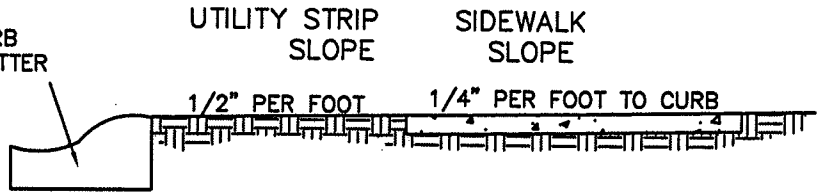

TYPICAL SECTION

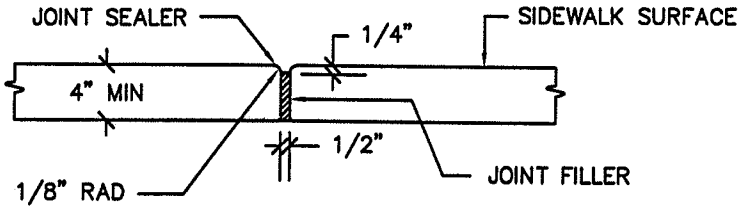

TRANVERSE EXPANSION JOINT

JOINT NOTES:
1. ½" EXPANSION JOINTS TO BE LOCATED A MAX. DISTANCE OF 50' APART.
2. ⅛" OPEN DIVISION JOINTS OR DUMMY JOINTS TO BE LOCATED AT 5' INCREMENTS.

NOTES:
1. TRANSVERSE EXPANSION JOINTS TO BE A MAXIMUM OF 50'.
2. ALL CONCRETE TO BE FINISHED WITH CURING COMPOUND.
3. ALL CONCRETE SHALL CONFORM TO ALL APPLICABLE REQUIREMENTS OF THE ACI.
4. WHEN FRONT EDGE OF WALK IS POURED ADJACENT TO CURB OR BACK OF WALK IS POURED ADJACENT TO A BUILDING OR EXISTING CONCRETE, A 1/2" EXPANSION JOINT SHALL BE PLACED BETWEEN THE NEW WALK AND EXISTING STRUCTURES
5. WHERE A DRIVEWAY CROSSES A WALK, THE SIDEWALK SHALL HAVE A DEPTH OF 6" WITH 1/2" EXPANSION JOINT EACH SIDE OF WALK.

REVISIONS	
DATE	DESCRIPTION

CITY OF SHELBY STANDARDS

Shelby NORTH CAROLINA

STANDARD CONCRETE SIDEWALK

STD. NO.

4.05

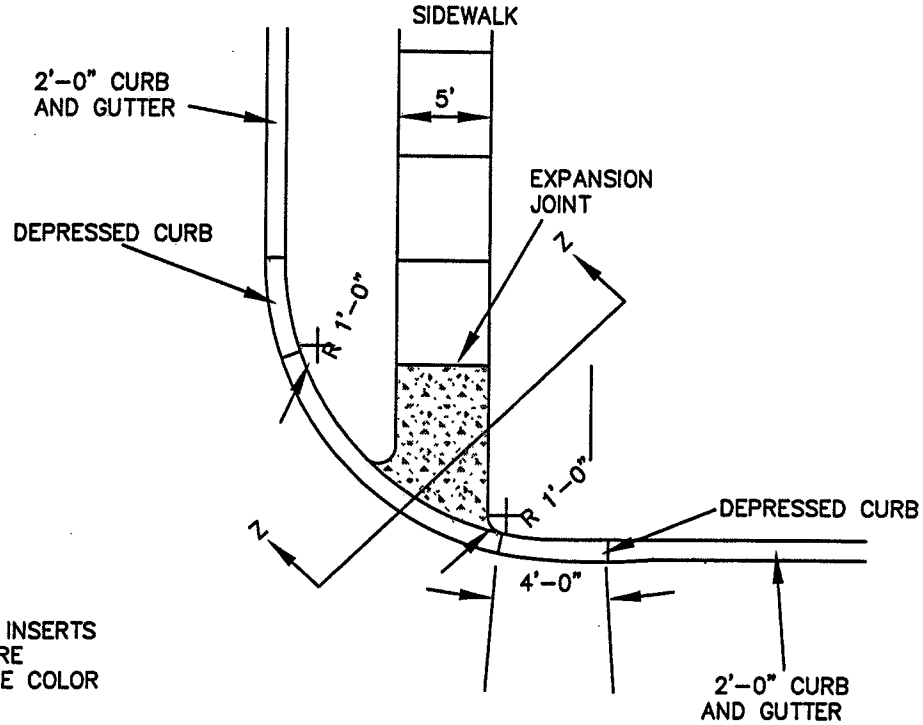

NOTE: RAMPS SHALL HAVE TEXTEURED INSERTS THAT MEET ADA REQUIREMENTS AND ARE APPROVED BY THE CITY ENGINEER. THE COLOR OF THE INSERTS SHALL BE RED.

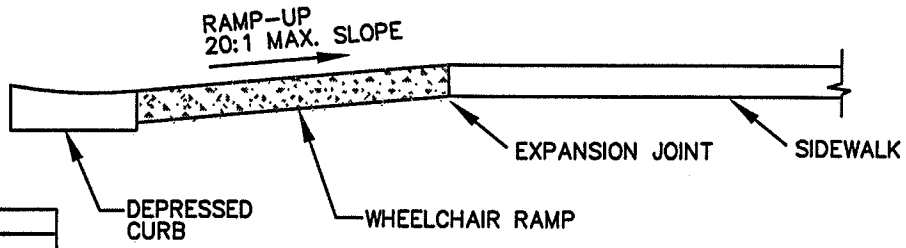

REVISIONS	
DATE	DESCRIPTION

CITY OF SHELBY STANDARDS

STANDARD WHEELCHAIR RAMP SINGLE TYPE

STD. NO.

4.06

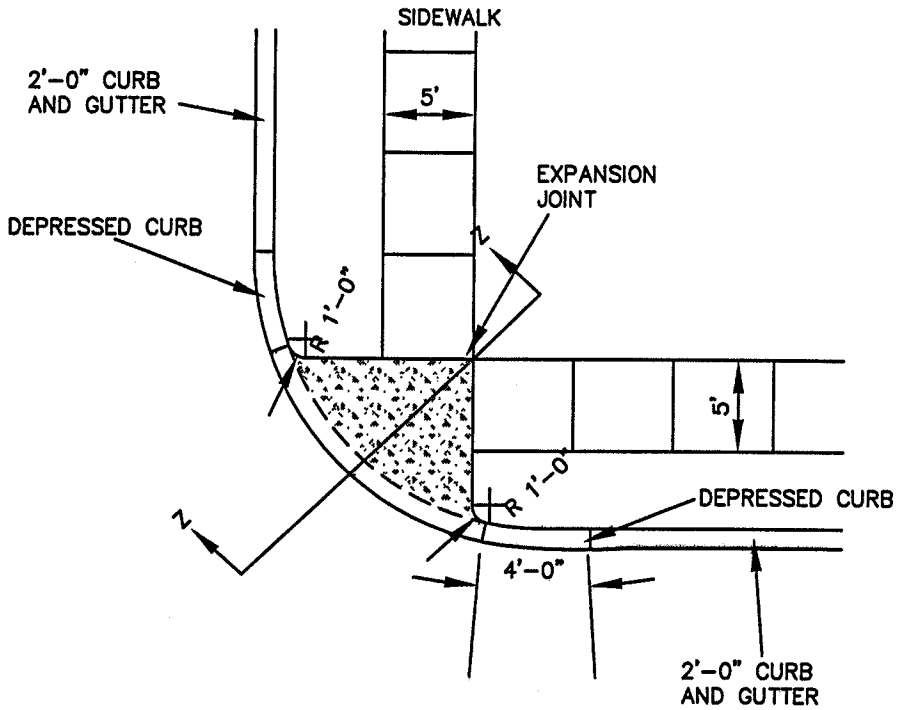

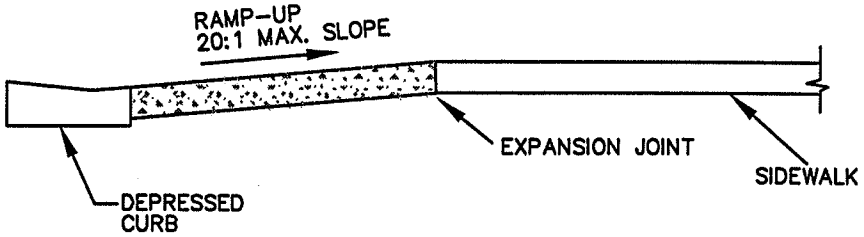

REVISIONS	
DATE	DESCRIPTION

CITY OF SHELBY
STANDARDS

STANDARD WHEELCHAIR RAMP
DOUBLE TYPE

STD. NO.
4.07

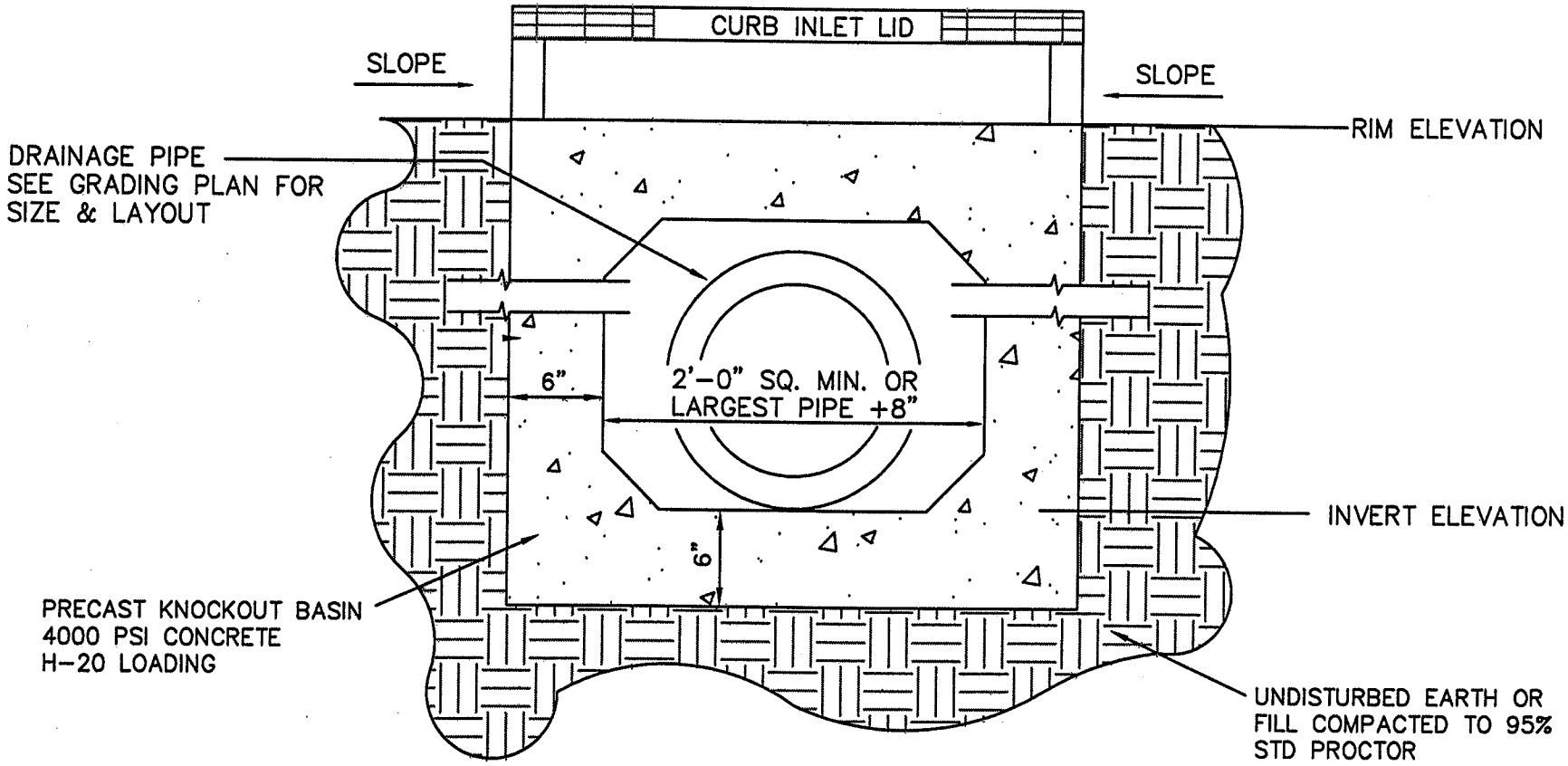

INSTALL & MAINTAIN INLET PROTECTION AROUND
ALL STORM DRAIN INLETS DURING CONSTRUCTION.

REVISIONS	
DATE	DESCRIPTION

CITY OF SHELBY STANDARDS

Shelby NORTH CAROLINA

BASIN DETAIL

STD. NO.

5.01

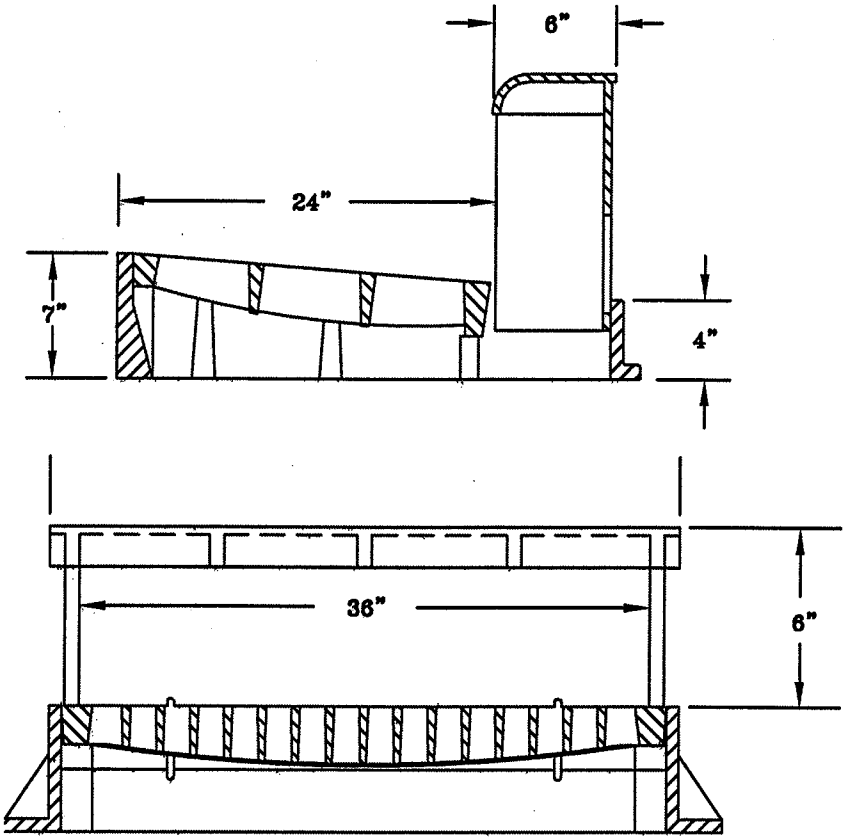

1. GRATES, FRAMES, AND HOODS SHALL BE IN ACCORDANCE WITH NCDOT STANDARD 840.02 AND 840.03

2. EMBOSS WITH "DUMP NO WASTE ! DRAINS TO WATERWAYS."

3. USE DIRECTIONAL GRATES WHEN DIRECTED.

NOTE:
A.S.T.M. CLASS: A48-60CL-30
1. CODE NO. CH-BN-2001 TYPE "C"
(DEWEY BROS. INC.; GOLDSBORO, NC)
2. CODE NO. CATALOGUE NO. CH-S-6
(SUMTER MACHINERY CO. INC; SUMTER, SC)

REVISIONS	
DATE	DESCRIPTION

CITY OF SHELBY
STANDARDS

Shelby NORTH CAROLINA

CURB INLET DETAIL

STD. NO.
5.02

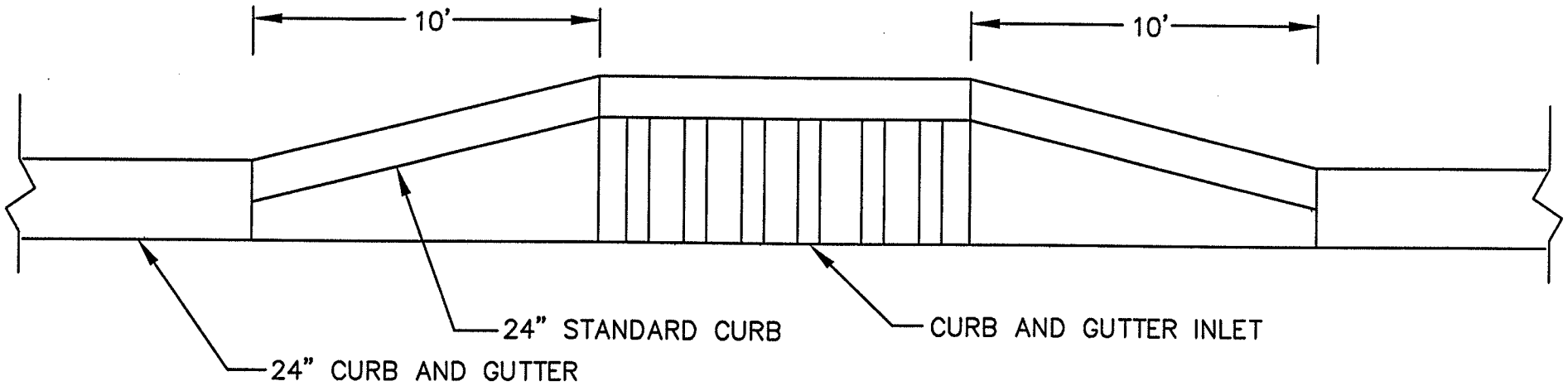

REVISIONS	
DATE	DESCRIPTION

CITY OF SHELBY STANDARDS

Shelby NORTH CAROLINA

CURB AND GUTTER TRANSITION

STD. NO.

5.03

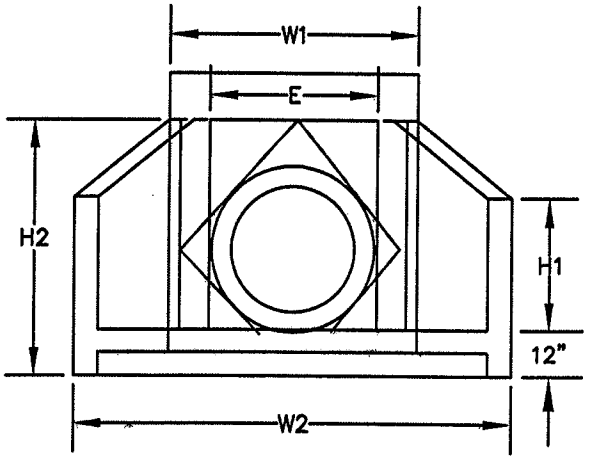

FRONT

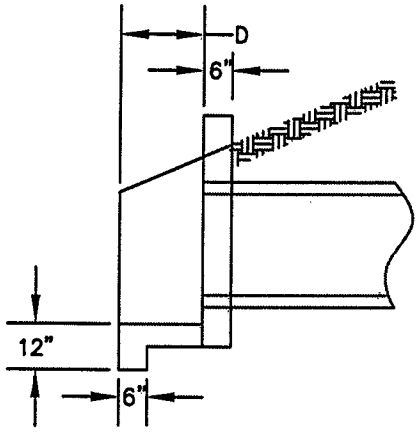

SIDE

NOTES:
1. ALL CONCRETE SHALL BE 4000 PSI MINIMUM.
2. REINFORCEMENT STEEL SHALL MEET ASTM-A615 GRADE 60 WITH 2" MINIMUM CLEARANCE.

INSIDE PIPE DIAMETER	REINF.	LBS.	W1	W2	H1	H2	D	E
12", 15", 18"	NO. 4	2060	44"	64"	23"	42 1/2"	18 1/2"	27"
21", 24"	NO. 4	3100	50"	85"	31"	56"	24"	33"
27", 30", 36"	NO. 4	5940	64"	108"	41"	72"	36"	49"
42", 48"	NO. 4	8040	79"	150"	52"	79"	40"	64"
54", 60", 72"	NO. 4, NO. 5	16000	105"	161"	60"	90"	48"	90"

REINFORCED CONCRETE HEADWALL

REVISIONS	
DATE	DESCRIPTION

CITY OF SHELBY STANDARDS

Shelby NORTH CAROLINA

STANDARD REINFORCED CONCRETE HEADWALL WITH WING WALLS

STD. NO.

5.04

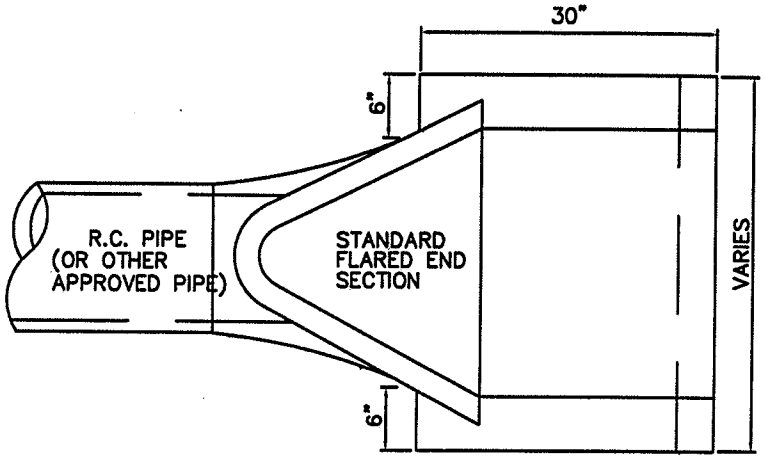

PLAN

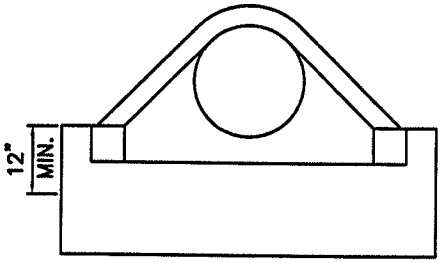

END VIEW

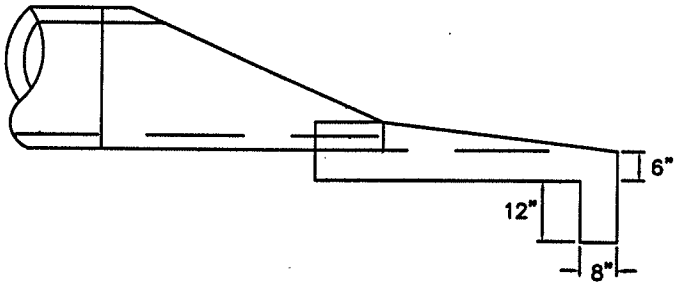

SIDE VIEW

NOTE:
TO BE USED ONLY FOR
PIPES 36" OR LESS IN DIAMETER

REVISIONS	
DATE	DESCRIPTION

CITY OF SHELBY STANDARDS

SPLASH PAD FOR FLARED END PIPE

STD. NO.

5.05

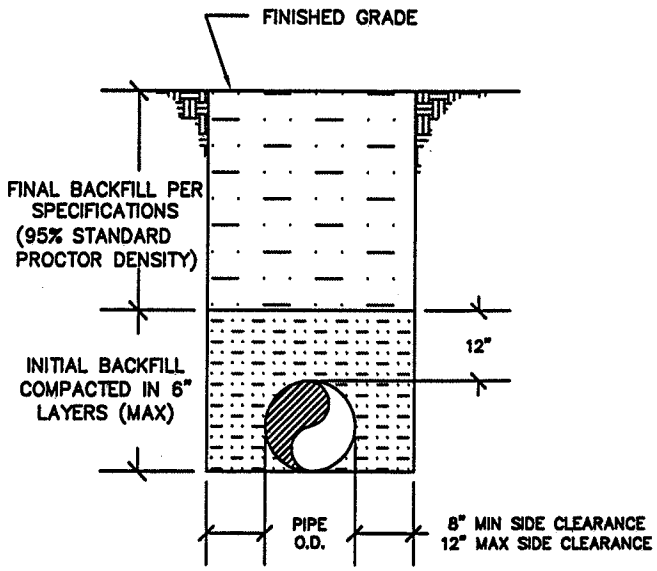

CLASS 'D' BEDDING
REQUIRED FOR DUCTILE IRON PIPES

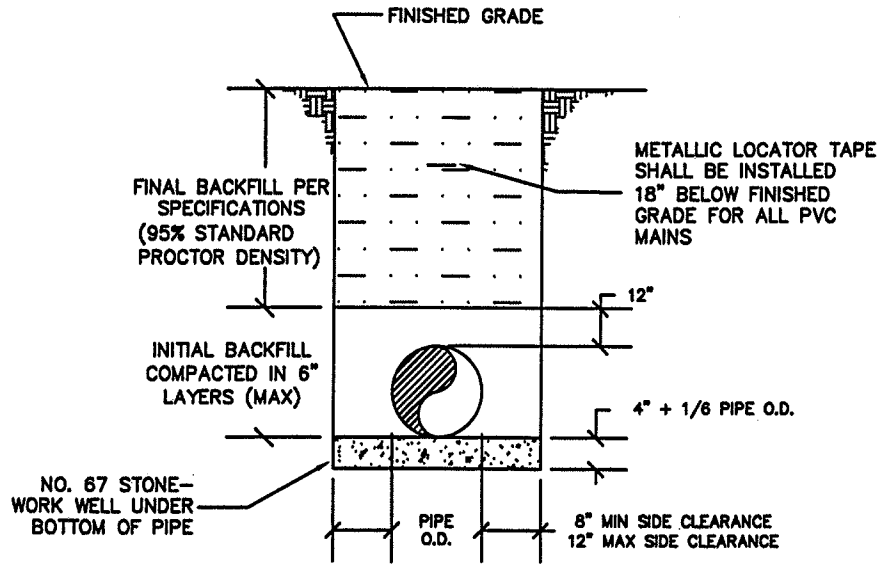

CLASS 'C' BEDDING
REQUIRED FOR C-900 PVC PIPE

NOTE:
FOR TRENCHES REQUIRING SHORING & BRACING, DIMENSIONS SHALL BE TAKEN FROM THE INSIDE FACE OF THE SHORING & BRACING.

REVISIONS	
DATE	DESCRIPTION

CITY OF SHELBY STANDARDS

Shelby NORTH CAROLINA

PIPE BEDDING AND BACKFILLING/ CLASS D&C

STD. NO.
6.01A

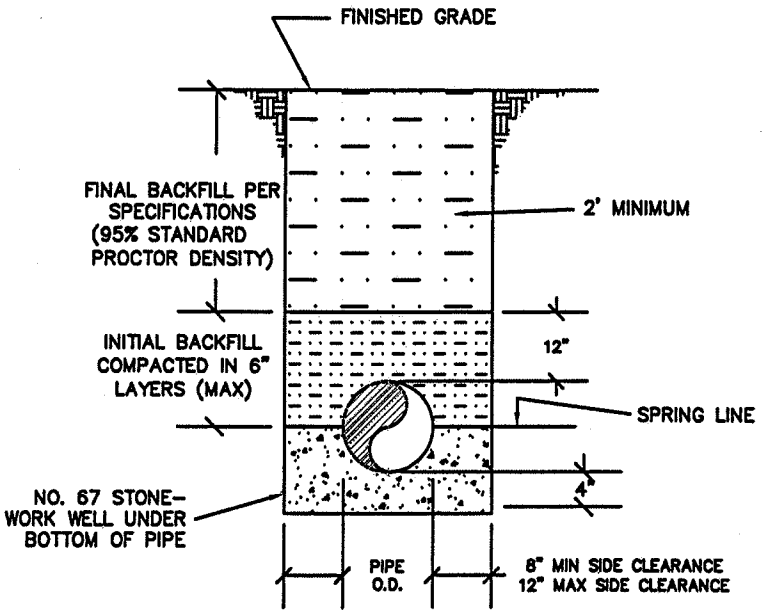

CLASS 'B' BEDDING
REQUIRED FOR FOR PVC SEWER PIPE, SDR-35

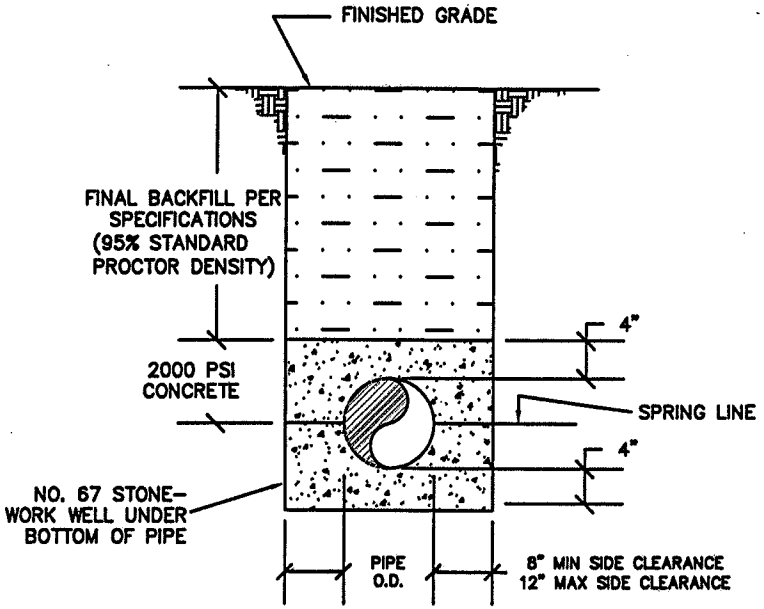

CLASS 'A' BEDDING

NOTE:
FOR TRENCHES REQUIRING SHORING & BRACING, DIMENSIONS SHALL BE TAKEN FROM THE INSIDE FACE OF THE SHORING & BRACING.

REVISIONS	
DATE	DESCRIPTION

CITY OF SHELBY STANDARDS

Shelby NORTH CAROLINA

PIPE BEDDING AND BACKFILLING/ CLASS B&A

STD. NO.
6.01B

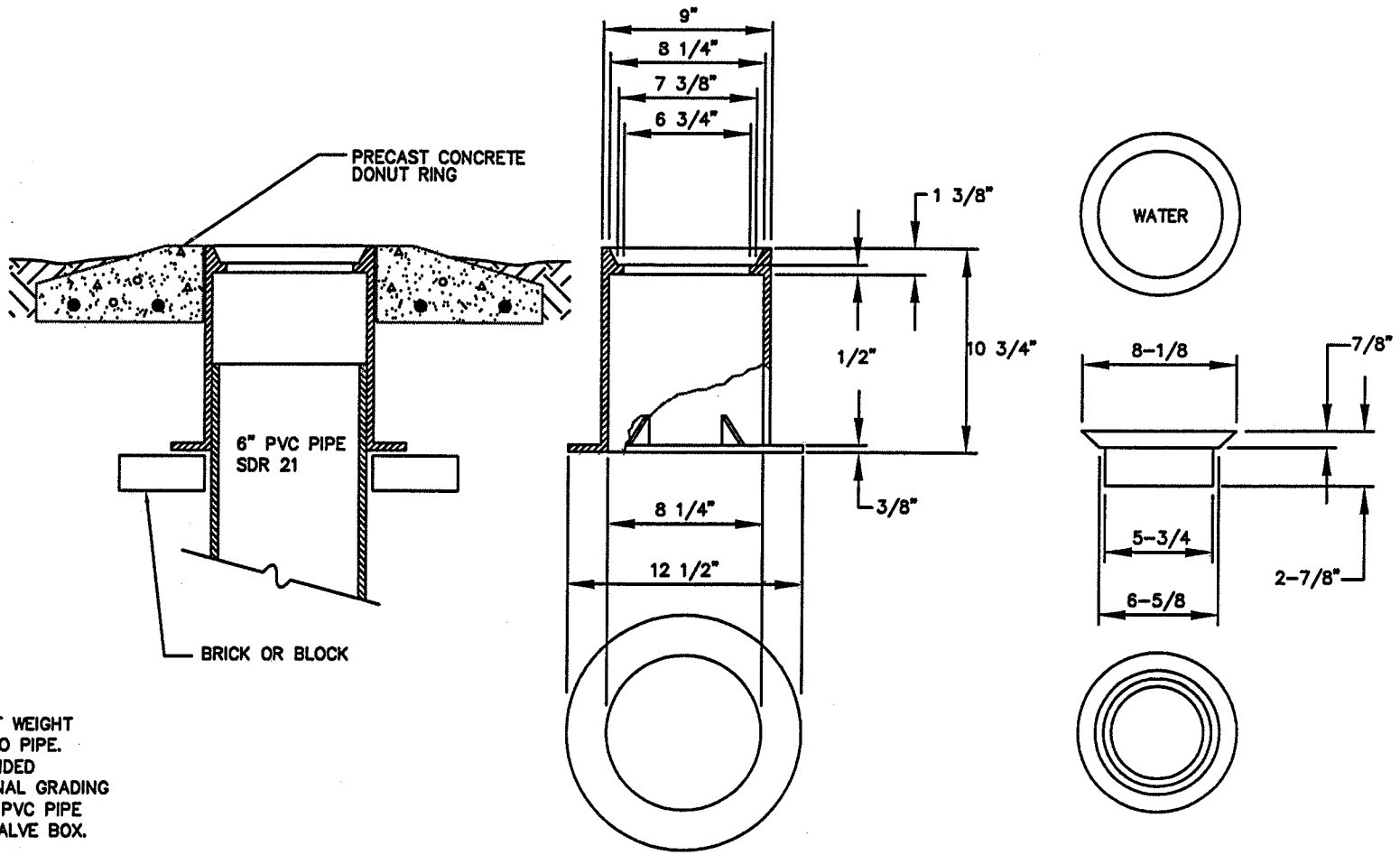

NOTES:
1. SUPPORT BOX SO THAT WEIGHT IS NOT TRANSFERRED TO PIPE.
2. PVC PIPE TO BE EXTENDED ABOVE GRADE UNTIL FINAL GRADING IS COMPLETE. CUT OFF PVC PIPE PRIOR TO INSTALLING VALVE BOX.

REVISIONS	
DATE	DESCRIPTION

CITY OF SHELBY STANDARDS

Shelby NORTH CAROLINA

STANDARD VALVE BOX

STD. NO.

6.02

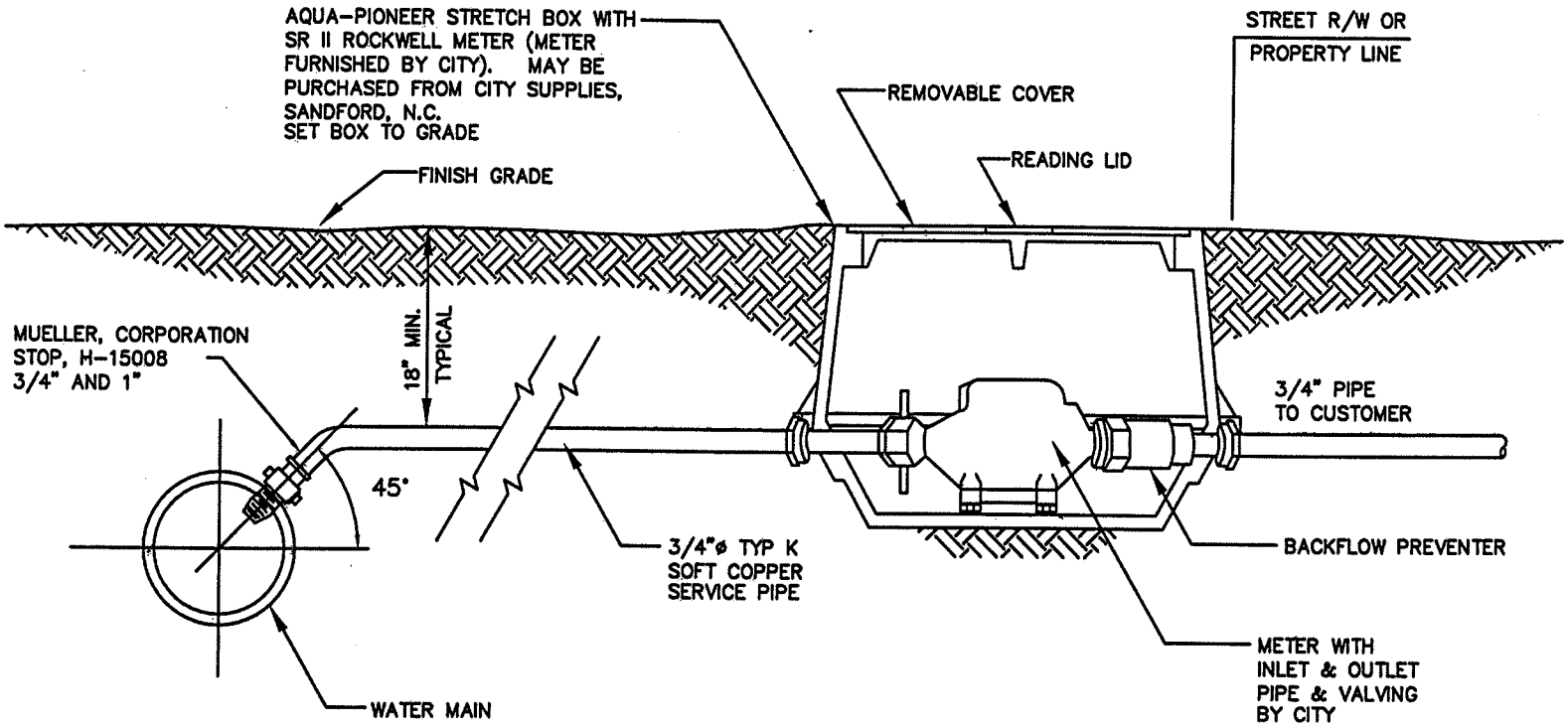

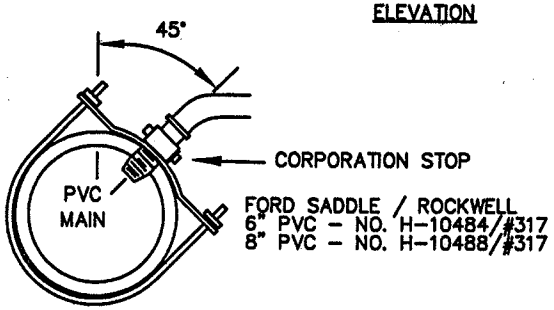

NOTES:
1. DIP, CLASS 52, CEMENT MORTOR LINED COMPLYING WITH ANSI/AWWA 151/A21.5
2. PUSH ON JOINTS WITH RUBBER GASKET AND LUBRICANT COMPLYING WITH ANSI/AWWA C111/A21.11
3. MECHANICAL JOINT DUCTILE IRON FITTING COMPLYING WITH ANSI/AWWA C110/A21.5

REVISIONS	
DATE	DESCRIPTION

CITY OF SHELBY STANDARDS

Shelby NORTH CAROLINA

STANDARD ¾" BACKFLOW/ METER ASSEMBLY

STD. NO.

6.03

SEE WS-30, FOR PIPE AND FITTING SCHEDULE

PIPE AND FITTINGS DEPEND ON SERVICE SIZE

PIT DEPTH = 3'-4'±

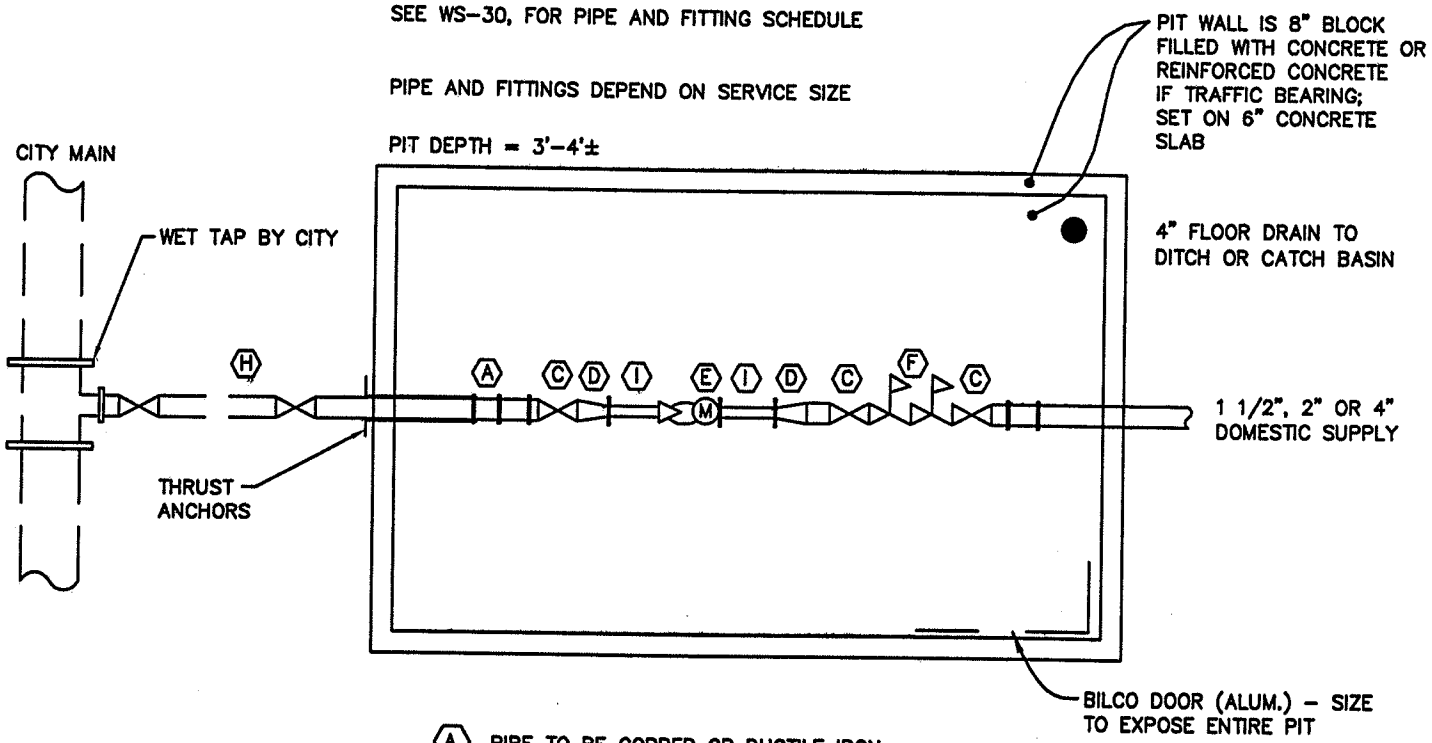

- (A) PIPE TO BE COPPER OR DUCTILE IRON
- (C) OS&Y VALVE
- (D) REDUCER
- (E) METER SIZED AND PURCHASED FROM CITY
- (F) DOUBLE CHECK VALVE
- (H) CL51 - SLIP JOINT DUCTILE IRON
- (I) 5 PIPE DIAMETERS OF STRAIGHT PIPE ON BOTH SIDES OF METER; I.E., FOR 1-1/2" METER J=7.5", etc.

REVISIONS	
DATE	DESCRIPTION

CITY OF SHELBY STANDARDS

Shelby NORTH CAROLINA

STANDARD 1 ½" AND 2" METER INSTALLATION AND VAULT

STD. NO.

6.04

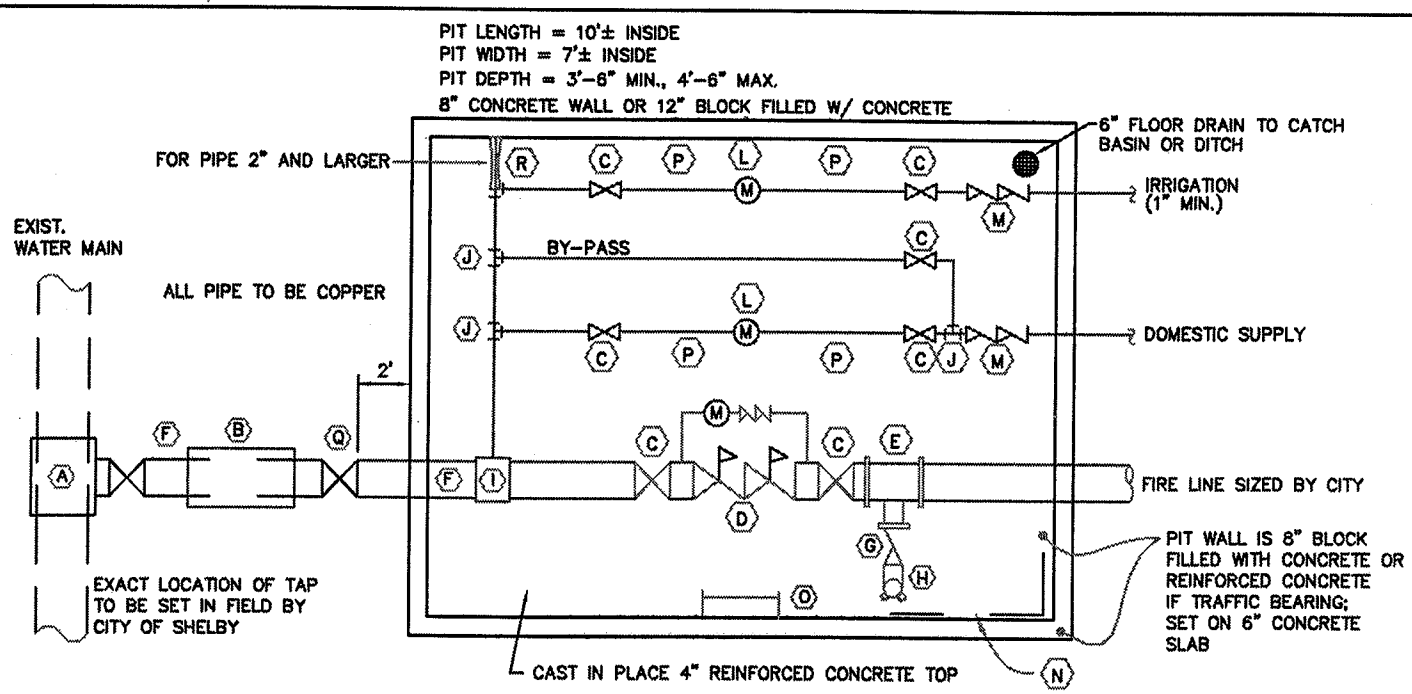

- (A) TAPPING SLEEVE AND VALVE-2" SQUARE OPERATING NUT W/VALVE BOX AND COVER
- (B) STEEL ENCASEMENT UNDER HIGHWAY
- (C) OS & Y VALVES
- (D) WATTS OR EQUAL 709DCDA-DOUBLE CHECK WITH DETECTOR METER
- (E) 8"x4" OR 6"x4" TEE
- (F) 10", 8" OR 6" - CL52 DIP
- (G) 4" CHECK VALVE
- (H) 4" RISER W/SIAMESE CONNECTION SET 3'-0" ABOVE PIT TOP
- (I) SADDLE AND TAP
- (J) TEE
- (L) METER SIZED AND PURCHASE FROM CITY
- (M) WATTS OR EQUAL 007QT DOUBLE CHECK VALVE
- (N) BILCO, JD-3AL ACCESS DOOR, CENTER DOOR OVER METERS AND SIZE FOR PIT
- (O) ACCESS LADDER-ALUMINUM
- (P) 5 PIPE DIAMETERS OF STRAIGHT PIPE ON BOTH SIDES OF METER; I.E., FOR 1-1/2" METER J=7.5", etc.
- (Q) INSTALL VALVE IF SERVICE MAIN IS UNDER HIGHWAY
- (R) STEEL THRUST BLOCKING TO PIT WALL

REVISIONS	
DATE	DESCRIPTION

CITY OF SHELBY STANDARDS

Shelby NORTH CAROLINA

COMMERCIAL METER VAULT

STD. NO.

6.05

NOTES:
HYDRANT TO BE PLACED WITH PUMPER NOZZLE FACING THE CLOSEST CURB.

HYDRANT TO BE PAINTED ONE COAT OF RED AFTER INSTALLATION.

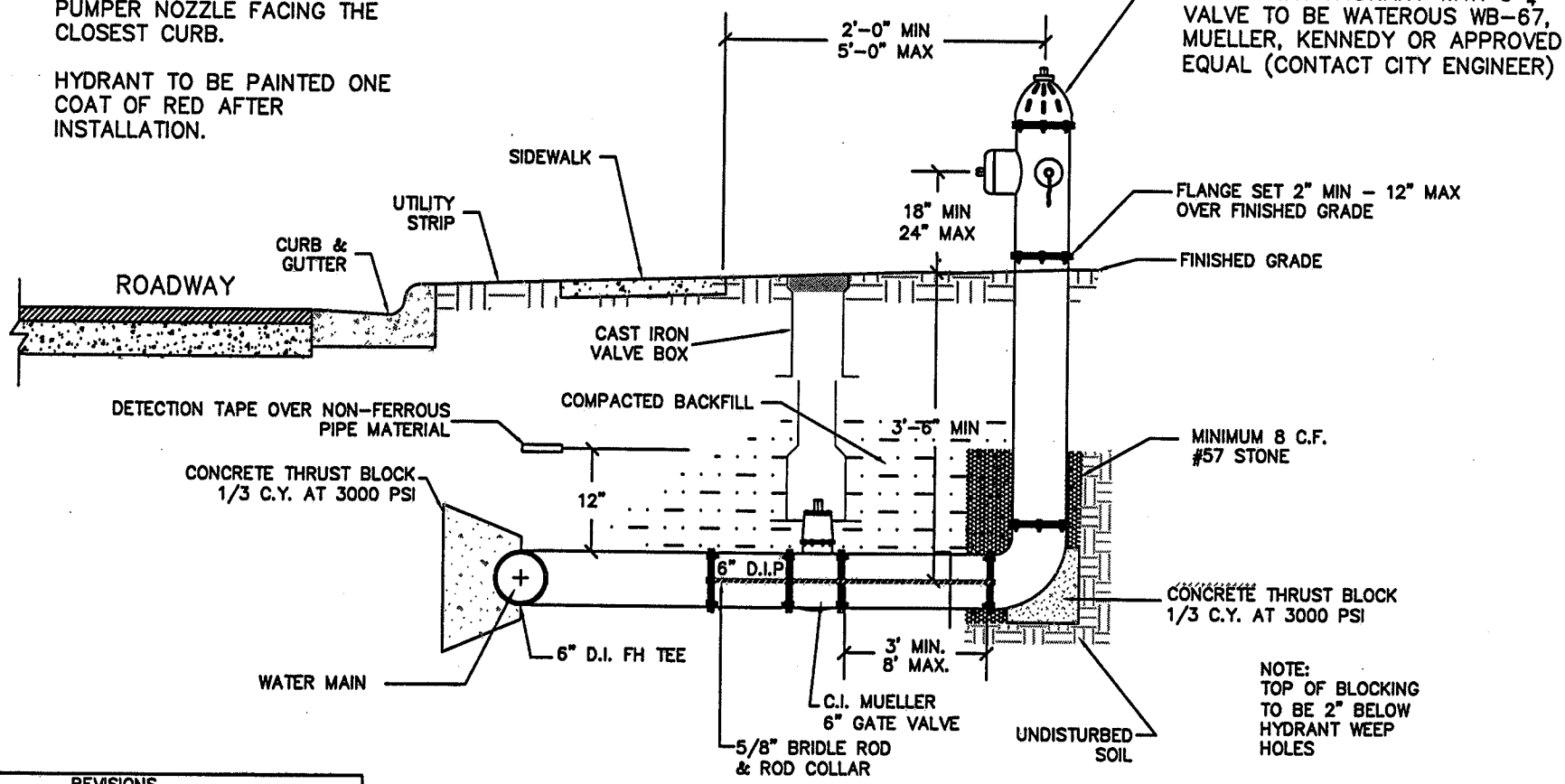

NOTE:
TOP OF BLOCKING TO BE 2" BELOW HYDRANT WEEP HOLES

REVISIONS	
DATE	DESCRIPTION

CITY OF SHELBY STANDARDS

Shelby NORTH CAROLINA

STANDARD HYDRANT INSTALLATION

STD. NO.
6.06

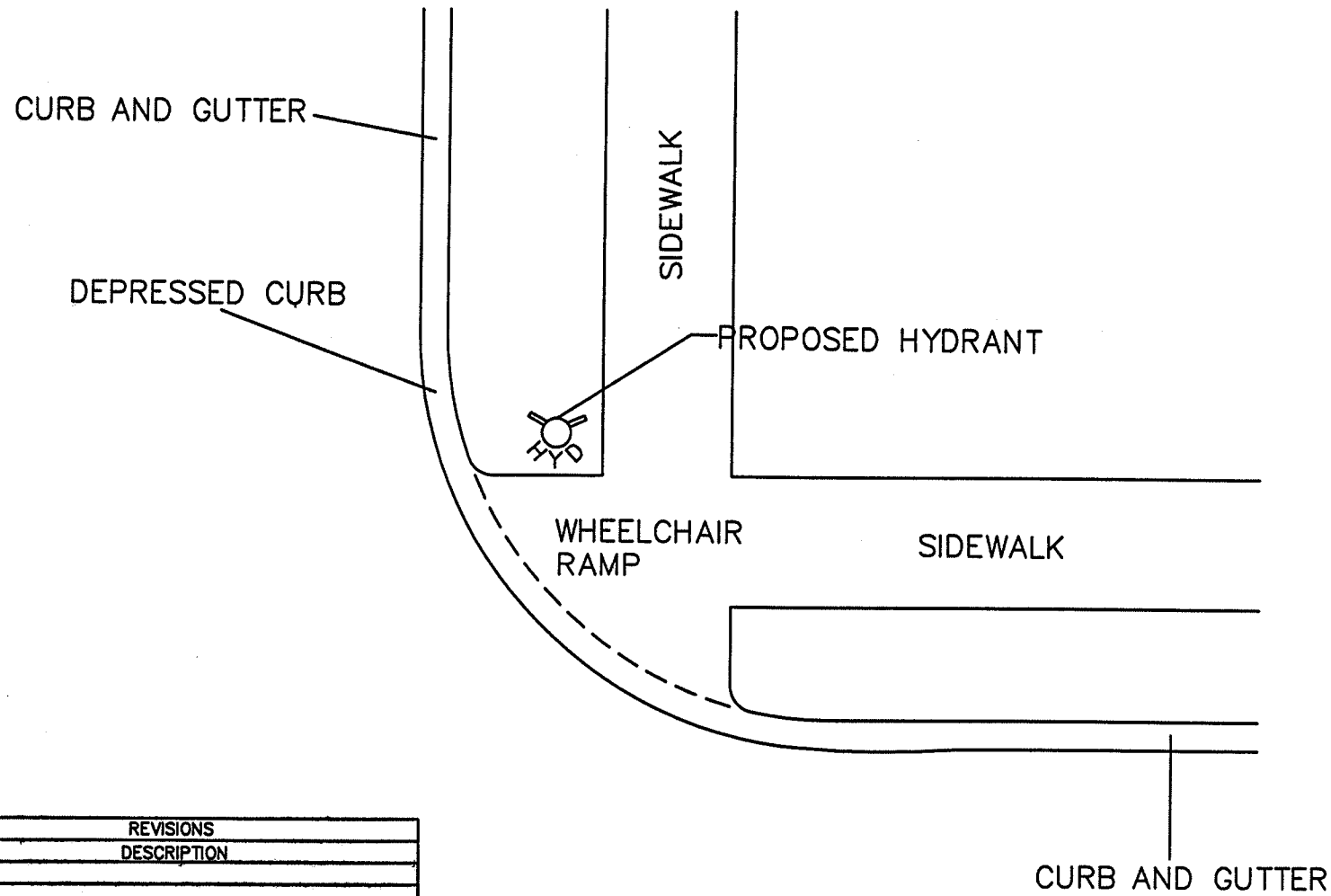

REVISIONS	
DATE	DESCRIPTION

CITY OF SHELBY STANDARDS

Shelby NORTH CAROLINA

STANDARD HYDRANT LOCATION

STD. NO.

6.07

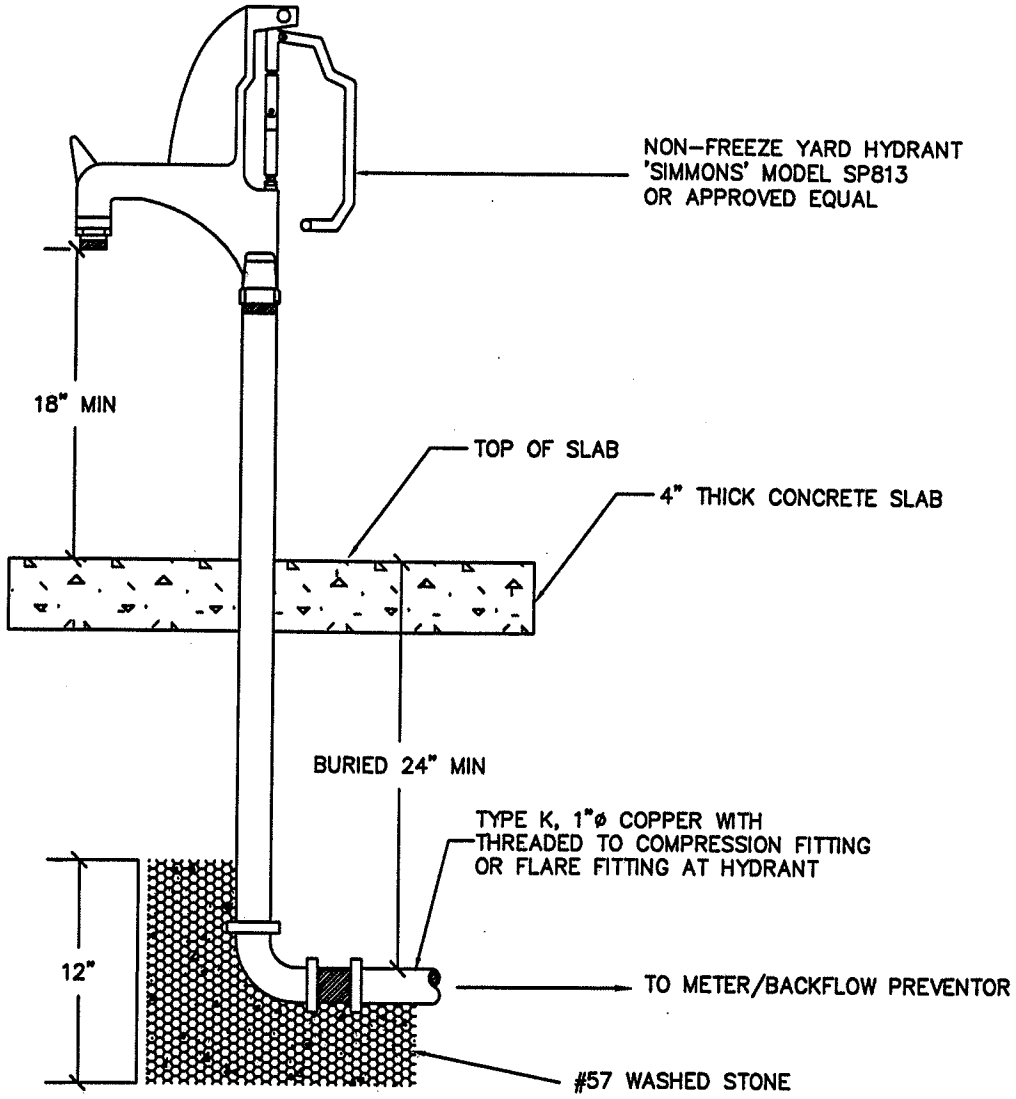

REVISIONS	
DATE	DESCRIPTION

CITY OF SHELBY STANDARDS

Shelby NORTH CAROLINA

YARD HYDRANT (NO-FREEZE)

STD. NO.

6.08

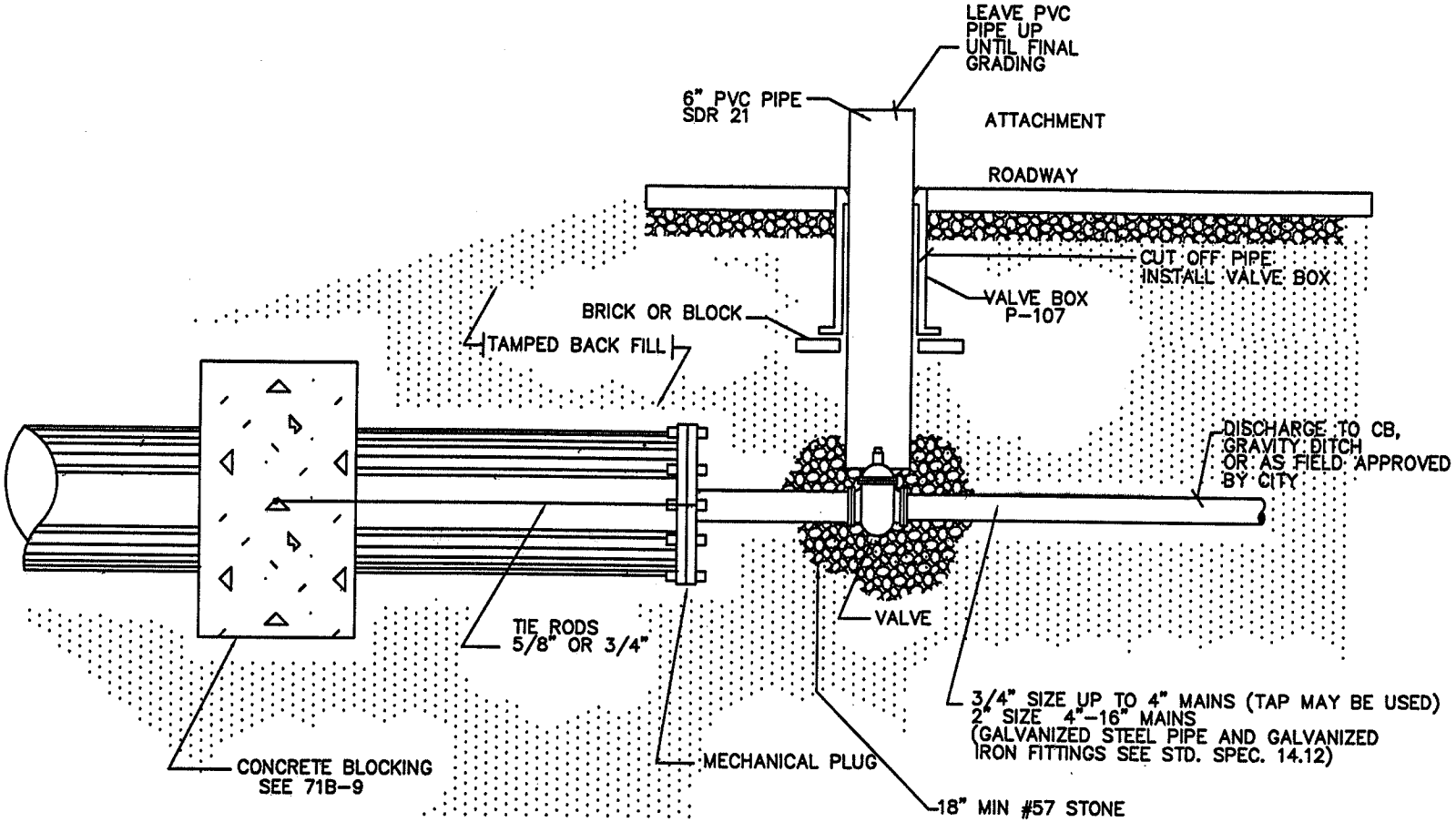

REVISIONS	
DATE	DESCRIPTION

CITY OF SHELBY STANDARDS

Shelby NORTH CAROLINA

BLOW OFF

STD. NO.

6.09

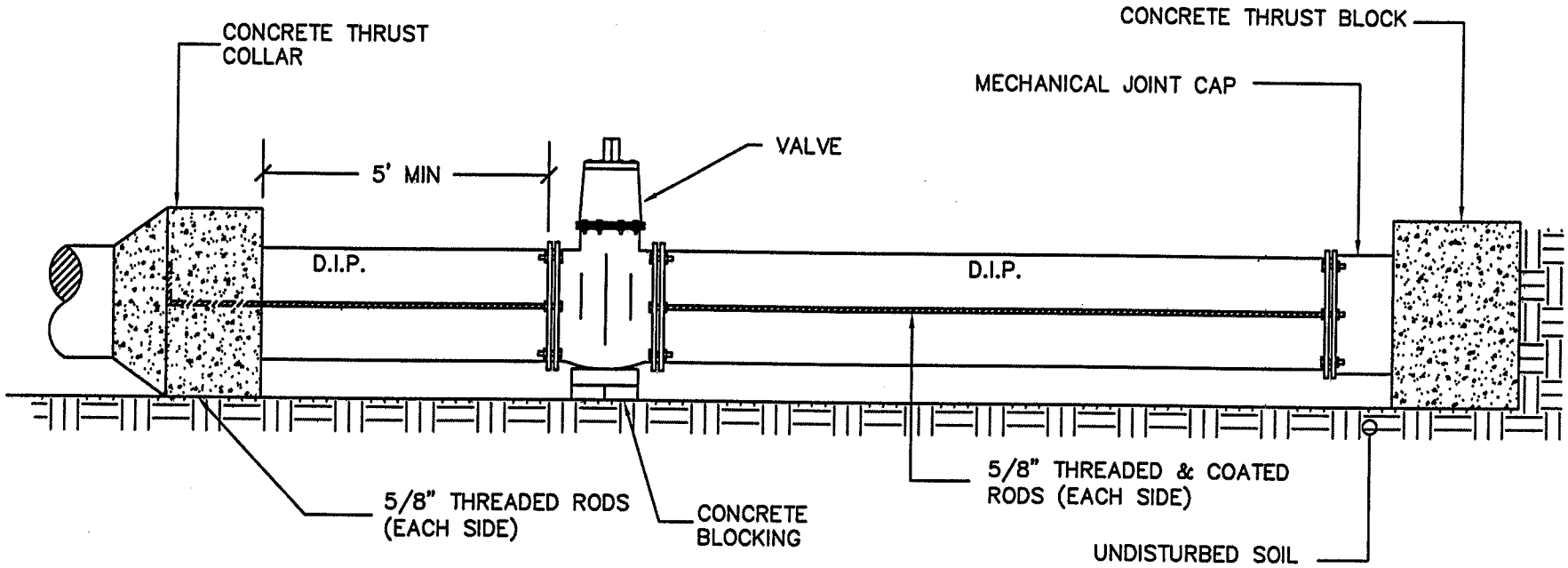

REVISIONS	
DATE	DESCRIPTION

CITY OF SHELBY STANDARDS

Shelby NORTH CAROLINA

STANDARD CAPPING DETAIL

STD. NO.

6.10

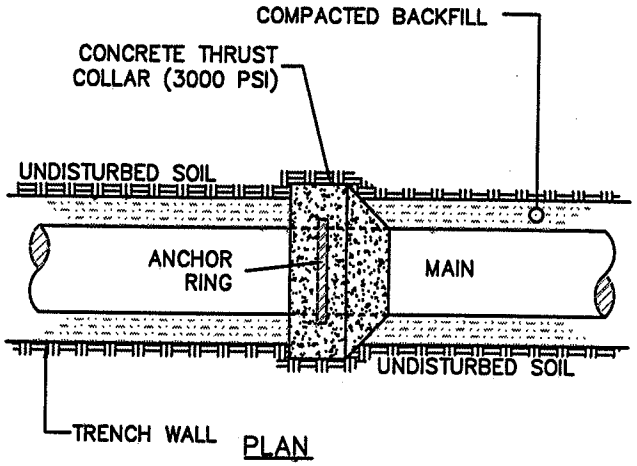

PLAN

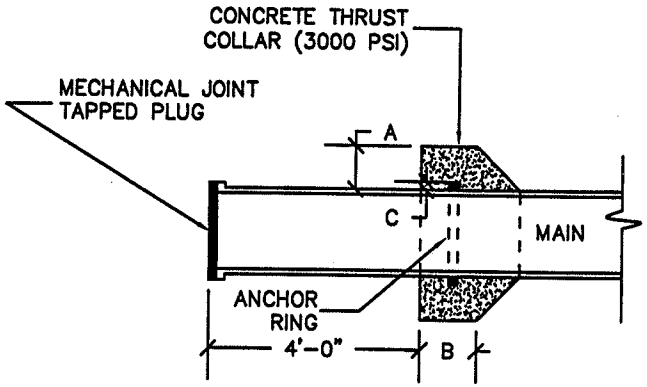

SECTION Z–Z

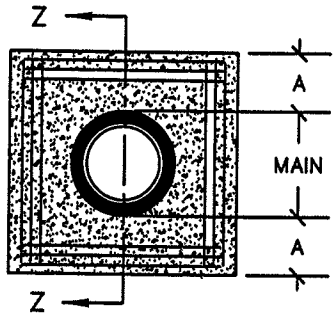

REINFORCING

NOTE:
6" TO 16" MAINS--12-NO. 7 BARS
20" TO 36" MAINS--12-NO. 8 BARS
* BARS PLACED AS SHOWN

SCHEDULE

PIPE DIAMETER	CONCRETE THRUST COLLAR		ANCHOR RING	RINGS REQUIRED
	A	B	C	
6" 8" 12"	1'-0"	1'-0"	2"	ONE
16"	1'-4"	1'-0"	2"	ONE
20"	1'-4"	1'-0"	3"	ONE
24"	1'-4"	1'-0"	3"	TWO
30"	1'-4"	1'-2"	4"	TWO
36"	1'-4"	1'-4"	4"	TWO

REVISIONS	
DATE	DESCRIPTION

CITY OF SHELBY STANDARDS

Shelby NORTH CAROLINA

STANDARD THRUST COLLAR INSTALLATION

STD. NO.

6.11

NOTE:
CORPORATION STOP, PIPING AND FITTINGS, GATE VALVE, AND AIR RELEASE VALVE SHALL BE 1" FOR WATER LINES 12" AND SMALLER AND SHALL BE 2" FOR ALL WATER LINES LARGER THAN 12".

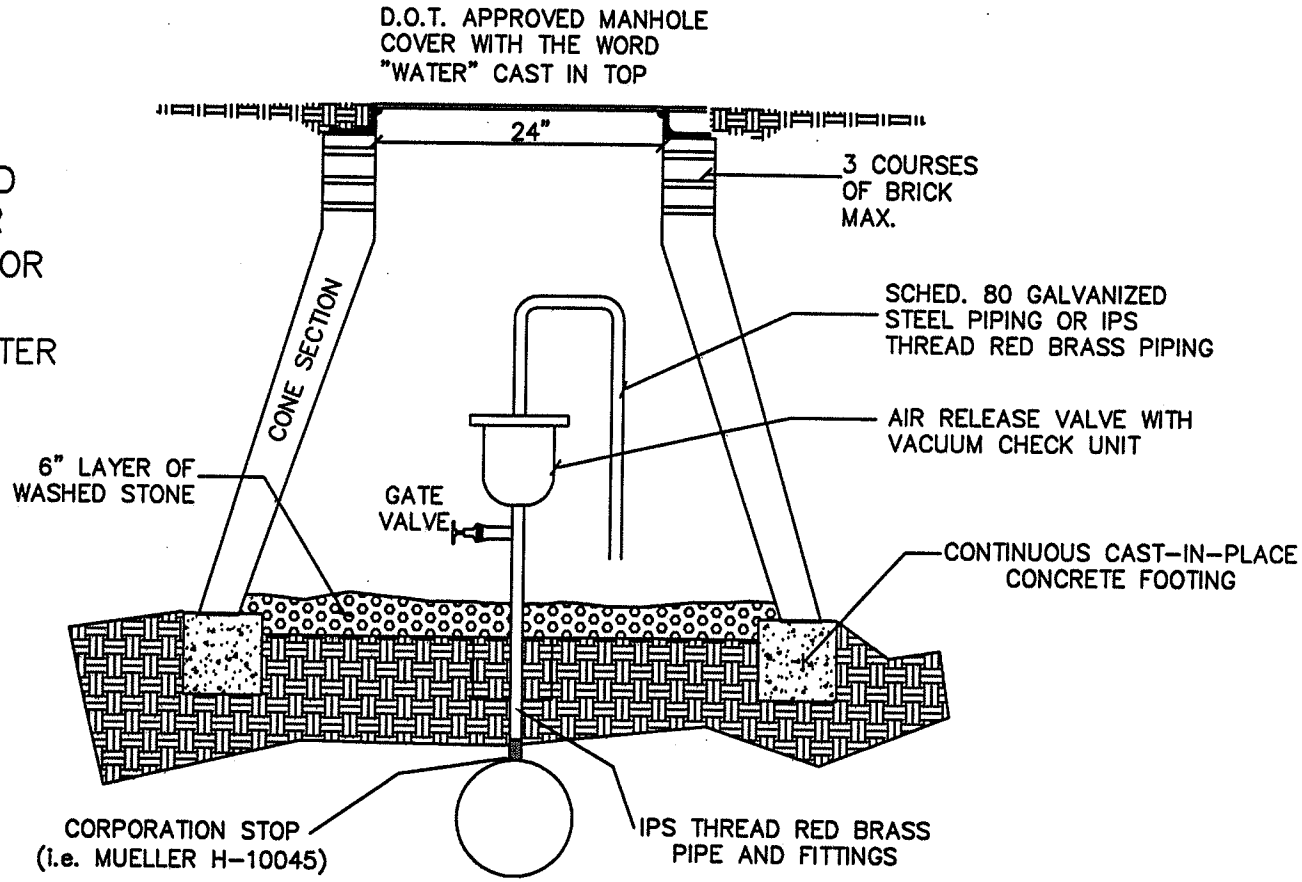

1" A.R.V. SHALL BE MODEL P-10 WITH VACUUM CHECK BY CRISPIN OR APPROVED EQUAL

2" A.R.V. SHALL BE MODEL P-20 WITH VACUUM CHECK BY CRISPIN OR APPROVED EQUAL

NOTES:
1. ALL CONCRETE SHALL BE 3000 PSI COMPRESSIVE STRENGTH.
2. FRAME TO BE FLUSH WITH GROUND IN ROAD R/W.
3. CONCRETE FOOTINGS MAY BE PLACED AGAINST SHAPED BANKS IN LIEU OF FORMS.
4. FOOTING DIMENSIONS TO BE AS SHOWN OR AS DIRECTED BY THE ENGINEER.
5. MANHOLE SHALL CONFORM TO SPECIFICATIONS.
7. MANHOLE FRAME & COVER TO BE ANCHORED TO MANHOLE WITH RED JACKET MASONRY ANCHORS OR EQUAL AND THOROUGHLY SEALED TO CONCRETE WITH TAR SEALANT PUTTY.

REVISIONS	
DATE	DESCRIPTION

CITY OF SHELBY STANDARDS

Shelby NORTH CAROLINA

STANDARD AIR RELEASE MANHOLE FOR WATER LINES

STD. NO.
6.12

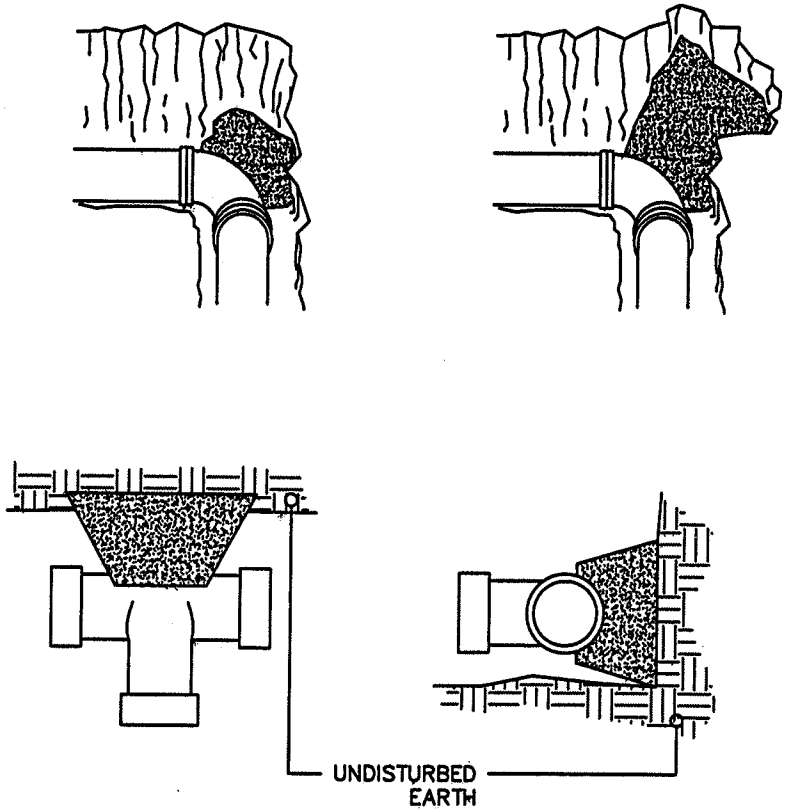

MINIMUM CONCRETE BLOCKING (C.Y.)*					
NOM. PIPE DIA. INCHES	TEES & DEAD ENDS	90° BEND	45° BEND	22-1/2° BEND	11-1/4° BEND
4	0.1	0.1	0.1	0.1	0.1
6	0.2	0.2	0.1	0.1	0.1
8	0.2	0.3	0.2	0.1	0.1
10	0.3	0.5	0.3	0.2	0.2
12	0.4	0.6	0.5	0.3	0.3
14	0.7	0.9	0.6	0.5	0.5
16	0.7	0.9	0.6	0.5	0.5
18	0.9	1.2	0.7	0.6	0.6
20	1.1	1.6	1.1	0.7	0.7
24	1.7	2.3	1.6	0.9	0.9

* CONCRETE SHALL BE 3000 PSI

NOTE: WRAP FITTINGS IN 6 MIL PLASTIC BEFORE POURING CONCRETE

REVISIONS	
DATE	DESCRIPTION

CITY OF SHELBY STANDARDS

Shelby NORTH CAROLINA

STANDARD REACTION BLOCKING

STD. NO.

6.13

NOTE: IRRIGATION METERS ARE REQUIRED ON ALL SUBDIVISIONS SERVICE

NOTES:
THERE SHALL BE NO MULTIPLE CONNECTIONS FOR SERVICES OTHER THAN 3/4".

CURB STOPS SHALL BE AS MANUFACTURED BY FORD OR APPROVED EQUAL.

METER BOXES SHALL BE AS DESCRIBED IN THE STANDARD SPECIFICATIONS UNDER WATER DISTRIBUTION; HOWEVER, THE INLET SHALL BE IRON PIPE THREADED INLETS.

CURB STOPS SHALL BE CENTERED ON MULTIPLE BRANCH SERVICE AND CONTAINED WITHIN A VALVE BOX.

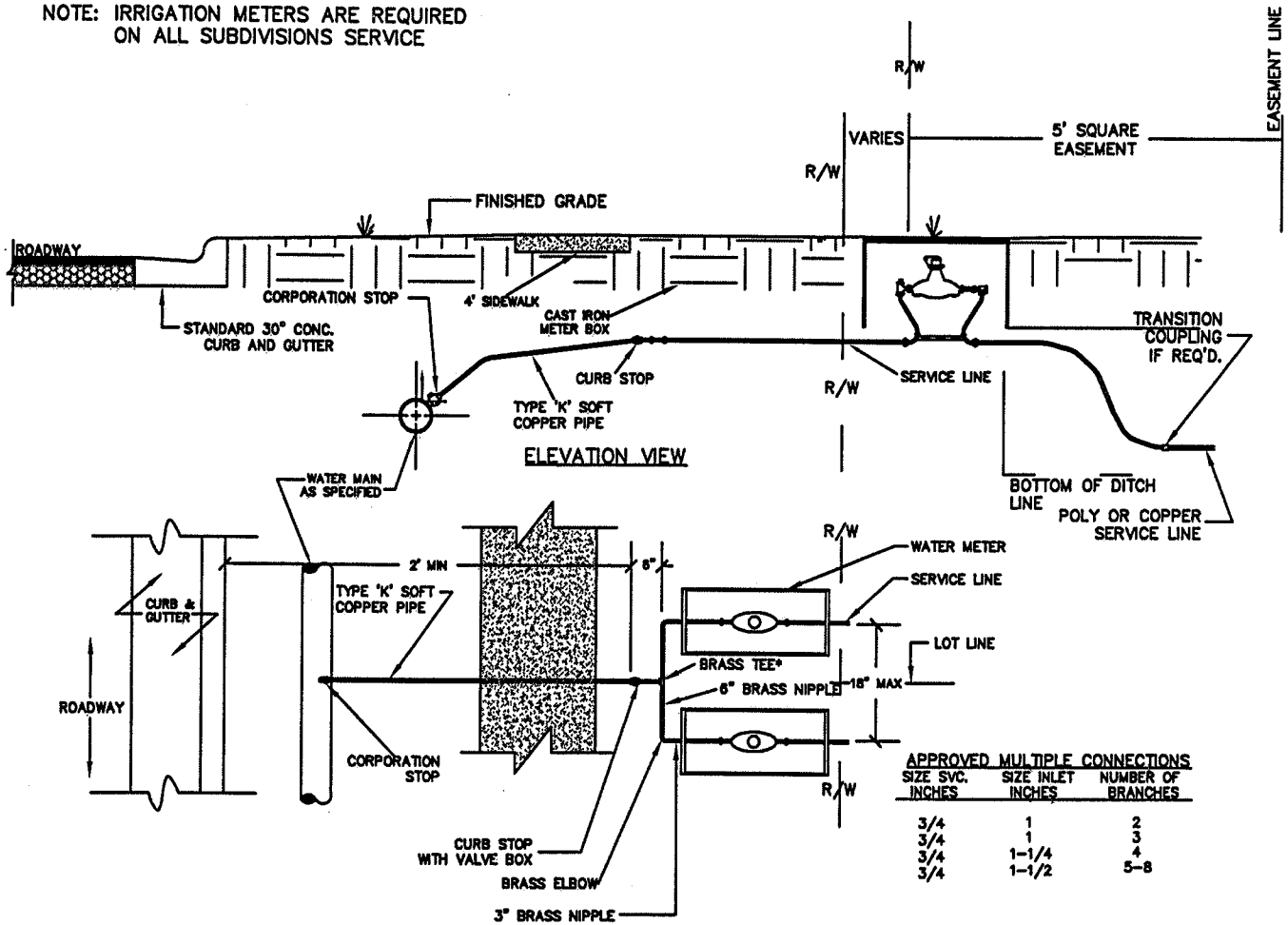

APPROVED MULTIPLE CONNECTIONS

SIZE SVC. INCHES	SIZE INLET INCHES	NUMBER OF BRANCHES
3/4	1	2
3/4	1	3
3/4	1-1/4	4
3/4	1-1/2	5-8

FOR MULTI-FAMILY PROJECTS ONLY

REVISIONS	
DATE	DESCRIPTION

CITY OF SHELBY STANDARDS

Shelby NORTH CAROLINA

STANDARD MULTIPLE BRANCH SERVICE

STD. NO. 6.14

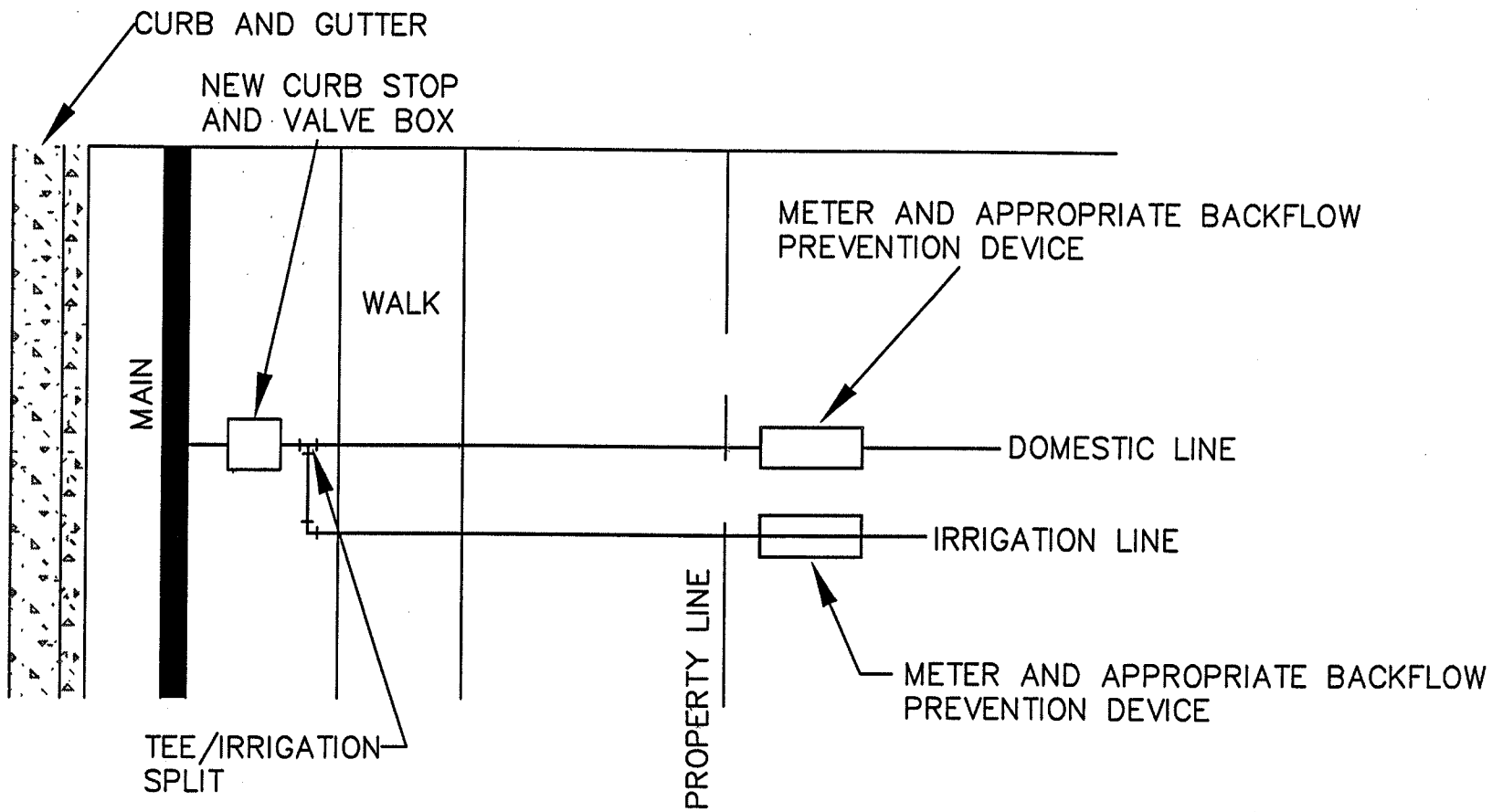

REVISIONS	
DATE	DESCRIPTION

CITY OF SHELBY STANDARDS

Shelby NORTH CAROLINA

IRRIGATION TAP ON EXISTING SERVICE

STD. NO.

6.15

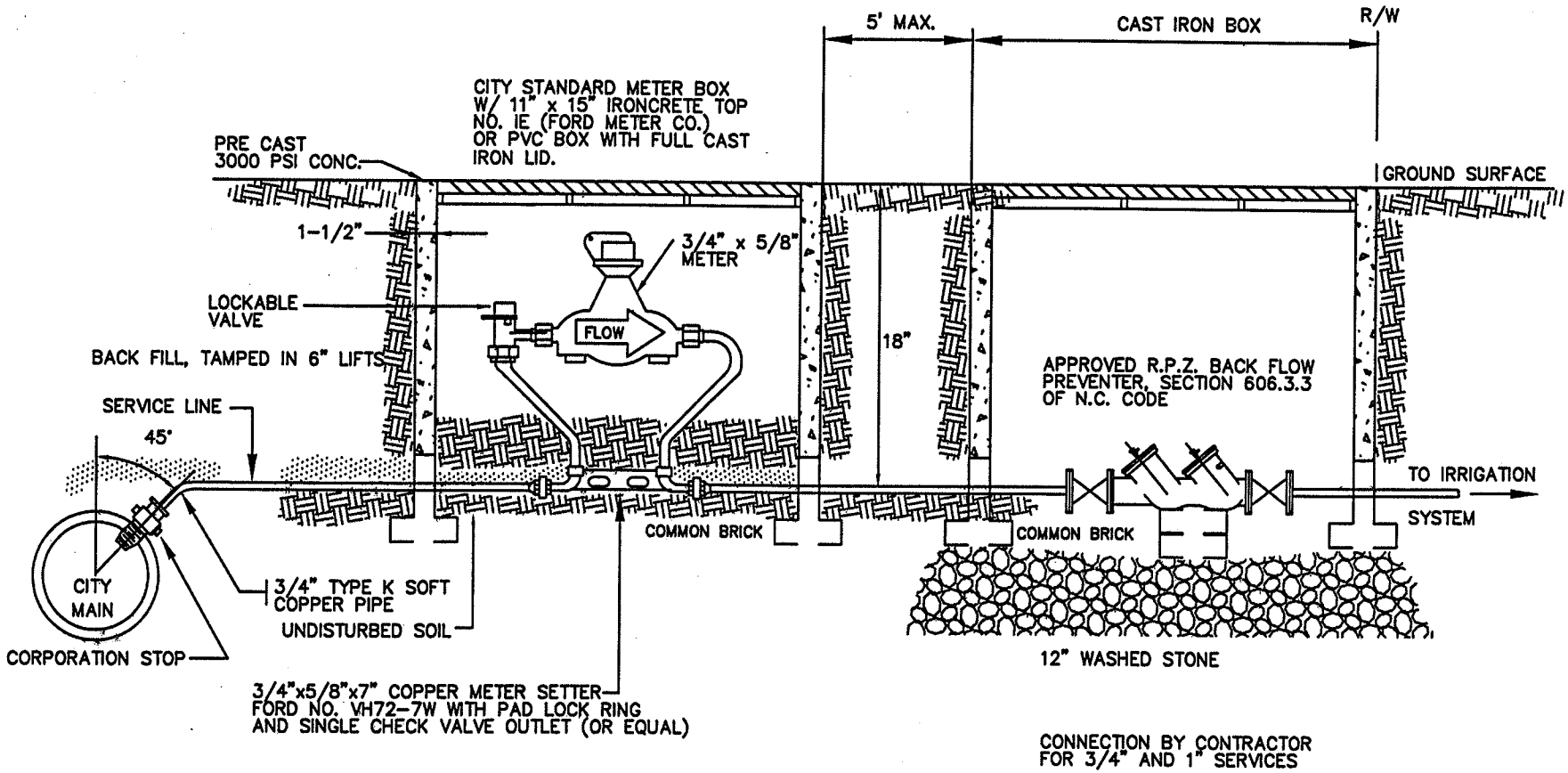

NOTE:

1. CITY WATER DEPARTMENT TO SIZE METER AND APPROVE R.P.Z./BFP DEVICE.
2. CITY WILL INSTALL TAP, SERVICE LINE, METER, YOKE AND BOX.
3. CONTRACTOR SHALL SUBMIT PLANS, PURCHASE METER FROM CITY AND INSTALL ALL FACILITIES FOR 1 1/2" OR LARGER SERVICES; CITY WILL PERFORM TAPS ONLY.

REVISIONS	
DATE	DESCRIPTION

CITY OF SHELBY STANDARDS

Shelby NORTH CAROLINA

TYPICAL IRRIGATION SYSTEM CONNECTION

STD. NO.

6.16

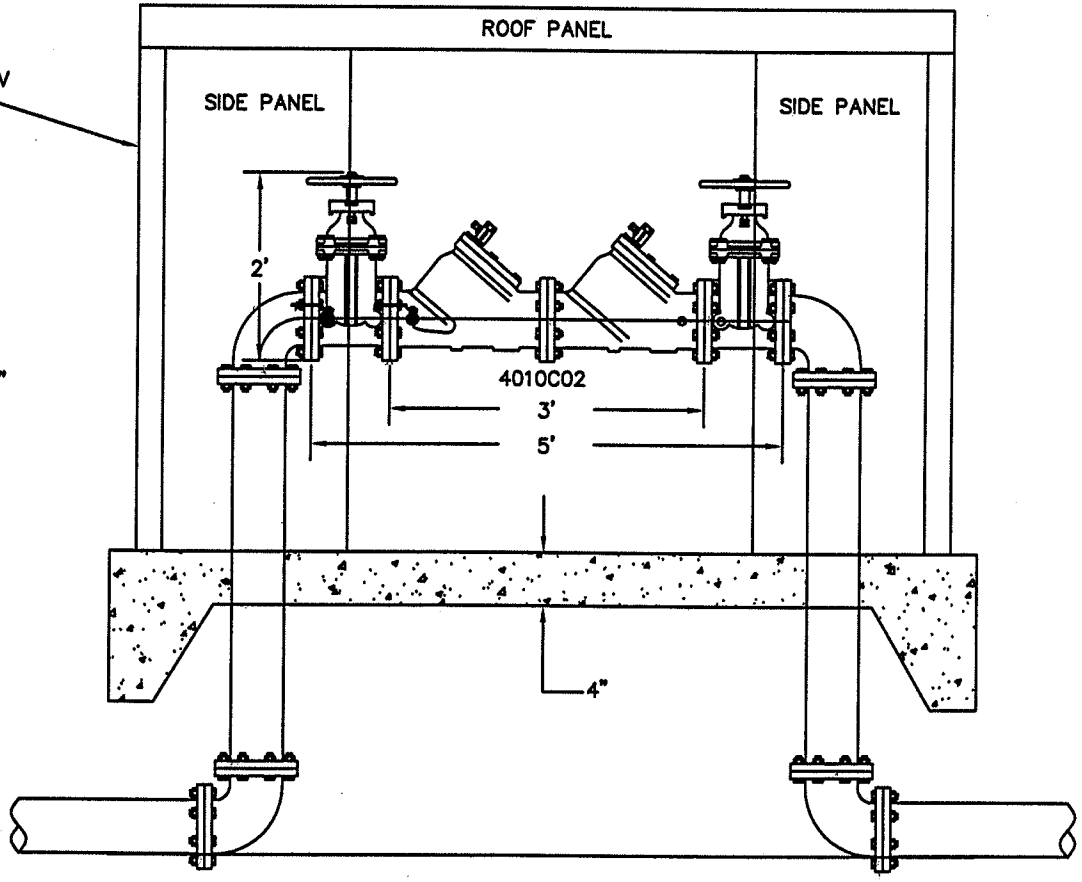

NOTES:

1) ALL PIPE IS TO BE DIP CL350.
2) THE DOUBLE CHECK VALVE SHALL BE 12" MINIMUM TO 30" MAXIMUM ABOVE THE CONCRETE PAD.
3) DOUBLE CHECK VALVE SHALL BE CONBRACO MODEL 40-10C-02 OR ENGINEER APPROVED EQUIVALENT.
4) ENCLOSURE SHALL BE A WATER SAFE ®2 DOOR ACCESS ENCLOSURE OR ENGINEER APPROVED EQUIVALENT.

REVISIONS	
DATE	DESCRIPTION

CITY OF SHELBY STANDARDS

Shelby NORTH CAROLINA

BACKFLOW PREVENTER IN HOT BOX

STD. NO.

6.17

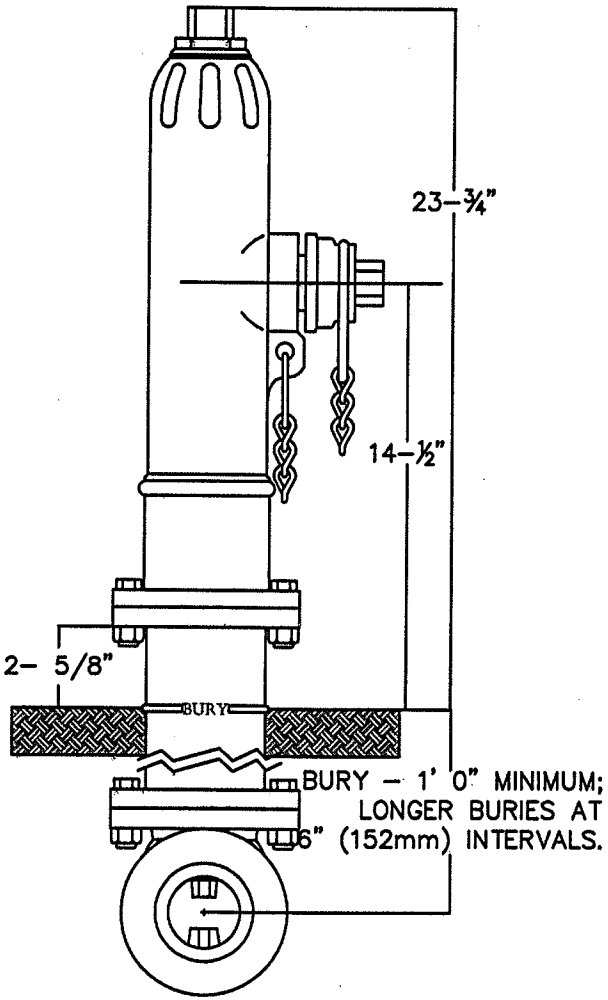

REVISIONS	
DATE	DESCRIPTION

CITY OF SHELBY STANDARDS

Shelby NORTH CAROLINA

POST TYPE 2-$\frac{1}{8}$" HYDRANT FOR USE AT END OF MAIN

STD. NO.

6.18

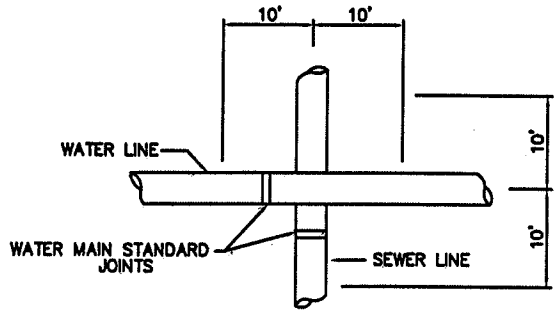

PLAN VIEW FOR WATER LINE OVER SEWER LINE W/LESS THAN 18" CLEARANCE

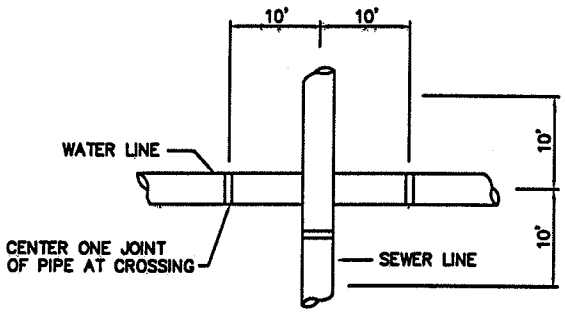

PLAN VIEW FOR WATER LINE UNDER SEWER LINE

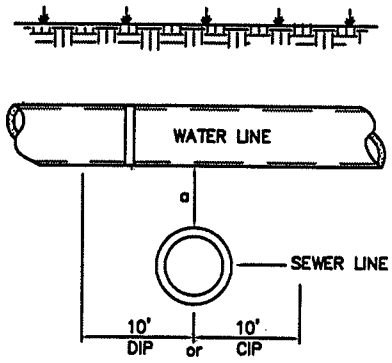

a = LESS THAN 18" BOTH WATER AND SEWER LINE SHALL BE WATER MAIN STANDARDS (JOINT) FERROUS METAL PIPE (DIP), FOR 10' EACH SIDE OF CROSSING

a = OVER 18" SDR 21 PVC SHALL APPLY

NOTE: SEE STANDARD SPECIFICATIONS SECTION 2.12

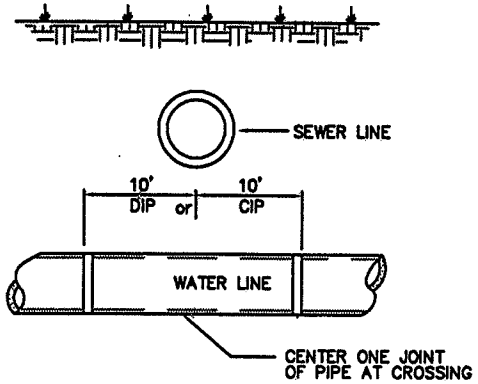

WATER AND SEWER LINE SHALL BE WATER MAIN STANDARD (JOINTS) FERROUS METAL PIPE (DIP), FOR 10' EACH SIDE OF CROSSING. ONE JOINT OF WATER MAIN PIPE SHALL BE CENTERED AT THE POINT OF CROSSING.

REVISIONS	
DATE	DESCRIPTION

CITY OF SHELBY STANDARDS

Shelby NORTH CAROLINA

FERROUS MATERIALS AND JOINT REQUIREMENTS FOR WATER LINE AND SEWER LINE CROSSINGS

STD. NO.

6.19

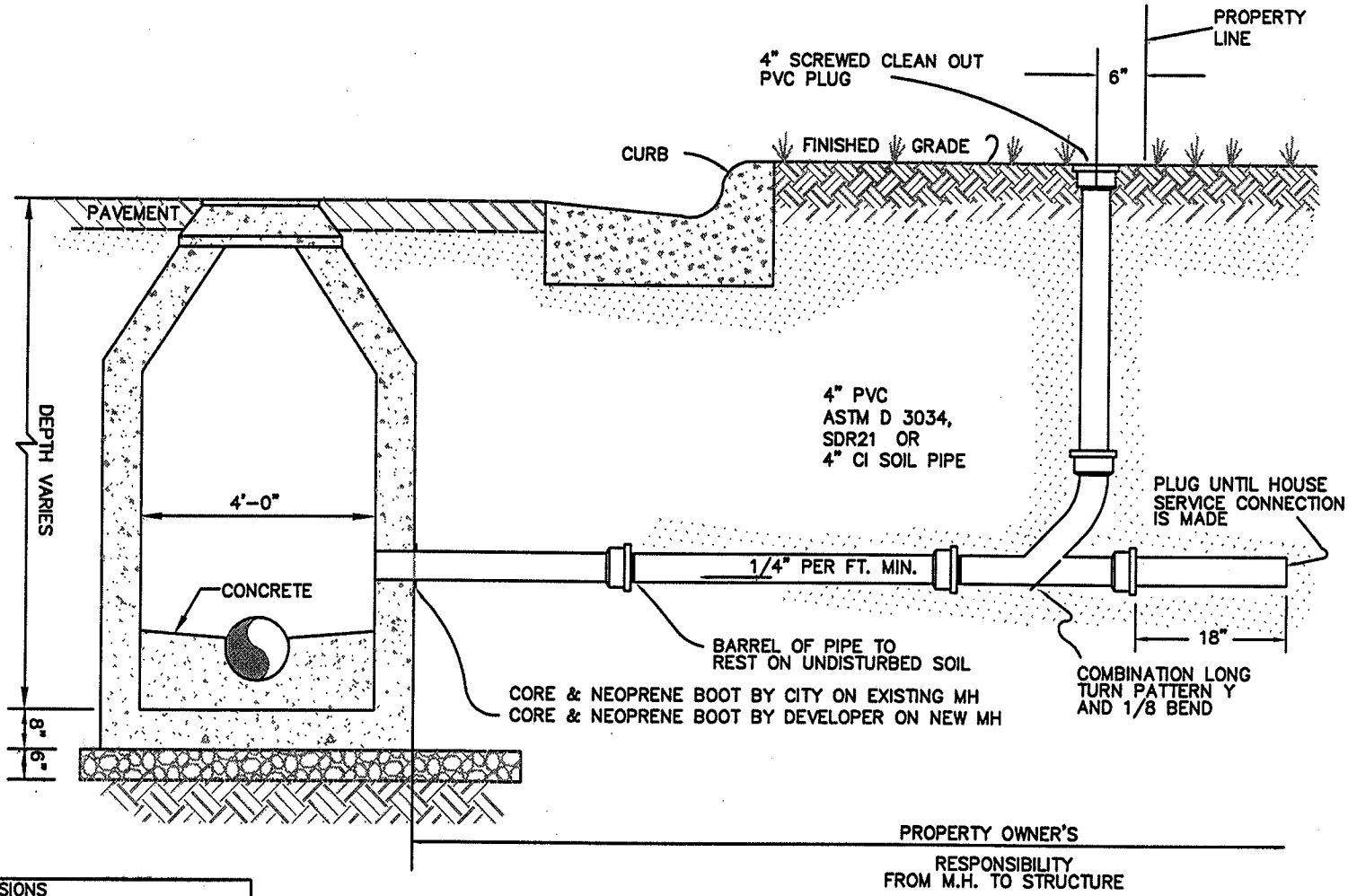

REVISIONS	
DATE	DESCRIPTION

CITY OF SHELBY STANDARDS

Shelby NORTH CAROLINA

STANDARD SANITARY SEWER TAP AND SERVICE TO EXISTING MANHOLE

STD. NO.

7.01A

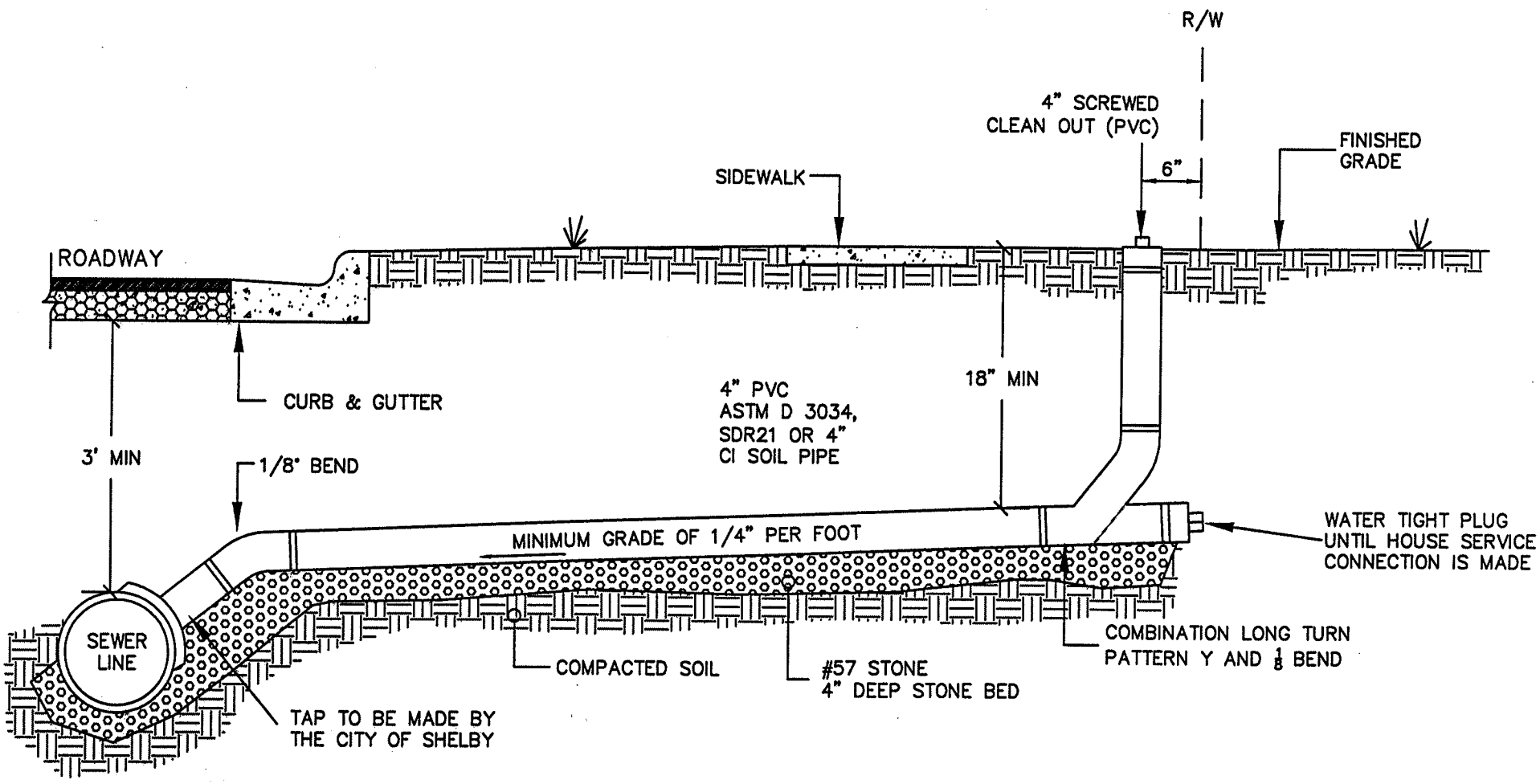

REVISIONS	
DATE	DESCRIPTION

NOTE:
1. WHEN A SADDLE IS USED, THE HOLE SHALL BE INSTALLED BY CORING.
2. THE FULL LENGTH OF THE SERVICE DITCH SHALL BE COMPACTED IN 6" LAYERS WITH MECHANICAL TAMP. GUARD STAKE REQUIRED AT CLEAN OUT LOCATION UNTIL LANDSCAPING IS COMPLETED.
3. PROPERTY OWNER'S RESPONSIBILITY FROM SEWER MAIN TO STRUCTURE.

CITY OF SHELBY STANDARDS

Shelby NORTH CAROLINA

STANDARD SANITARY SEWER TAP AND SERVICE TO EXISTING MAIN

STD. NO.

7.01B

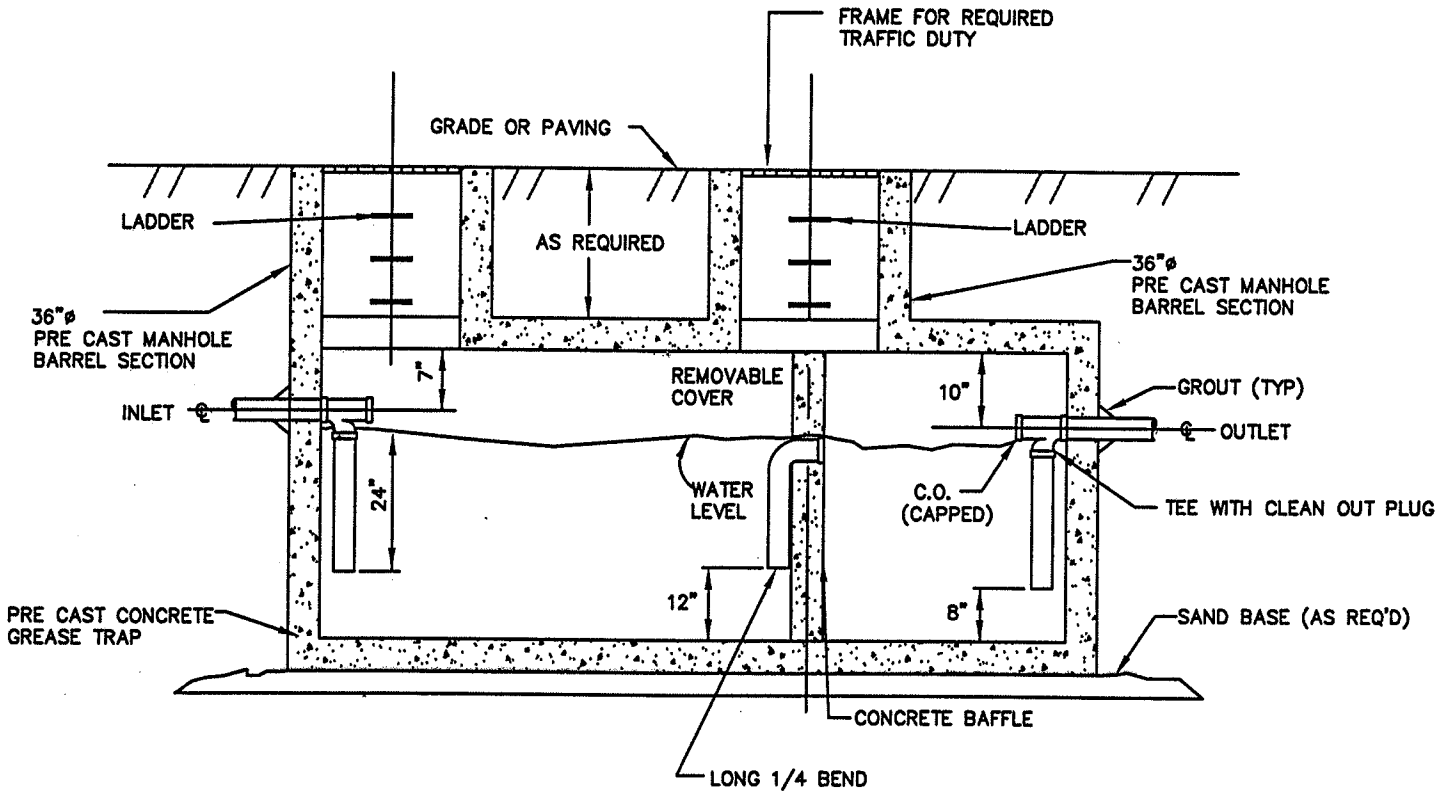

NOTE: ALL DIMENSIONS AND CONFIGURATIONS SHOWN SHALL BE REVIEWED WITH LOCAL AUTHORITY HAVING JURISDICTION

THIS IS SCHEMATIC ONLY. CONTRACTOR MAY PURCHASE PREFAB GREASE INTERCEPTOR OR FIELD BUILD OUT OF CONCRETE. SIZE OF INTERCEPTOR SHALL BE DETERMINED BY LOCAL CODE REQUIREMENTS.

ALTERNATE GREASE INTERCEPTOR
JAY R. SMITH MODEL 8035
FABRICATED STEEL GREASE INTERCEPTOR, 70 LB CAP.
35GPM FLOW RATE, NON SKID UNI-LOCK COVER.

REVISIONS	
DATE	DESCRIPTION

CITY OF SHELBY STANDARDS

Shelby NORTH CAROLINA

GREASE INTERCEPTOR DETAILS AND SPECIFICATIONS

STD. NO.
7.02

NOTES:
1. MANHOLE RISERS AND CONE SECTIONS SHALL CONFORM TO ASTM C-478, LATEST REVISION.
2. TRANSITION RINGS SHALL HAVE A MINIMUM CLEARANCE OF 2'-0" ABOVE THE EFFLUENT OVERT ELEVATION.
3. FLEXIBLE WATERTIGHT, SYNTHETIC RUBBER SLEEVES, WITH STAINLESS STEEL CLAMP: DRAW BOLT AND NUT; OR CAST-IN SLEEVE; OR "A" LOCK CONNECTION SHALL BE FURNISHED FOR EACH PIPE TO MANHOLE CONNECTION.
4. CONE SECTION TYPE TO BE DETERMINED BY CITY BASED ON INDIVIDUAL PROJECT NEEDS.

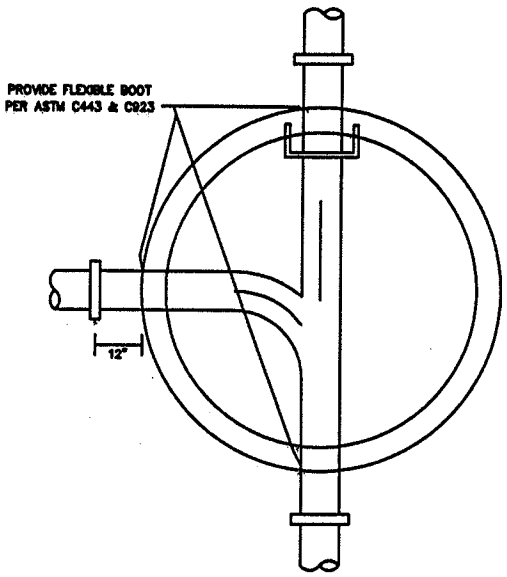

STANDARD MH RINGS AND COVERS: VULCAN FOUNDARY, INC., "V-B1384", NEENAH "R-1550", U.S. FOUNDARY "USF-669 VENTED", OR EQUAL.

WATERTIGHT MH RINGS AND COVERS: VULCAN FOUNDARY, INC., "V-2328", NEENAH "R-1915H", U.S. FOUNDARY "USF-669 BWT", OR EQUAL.

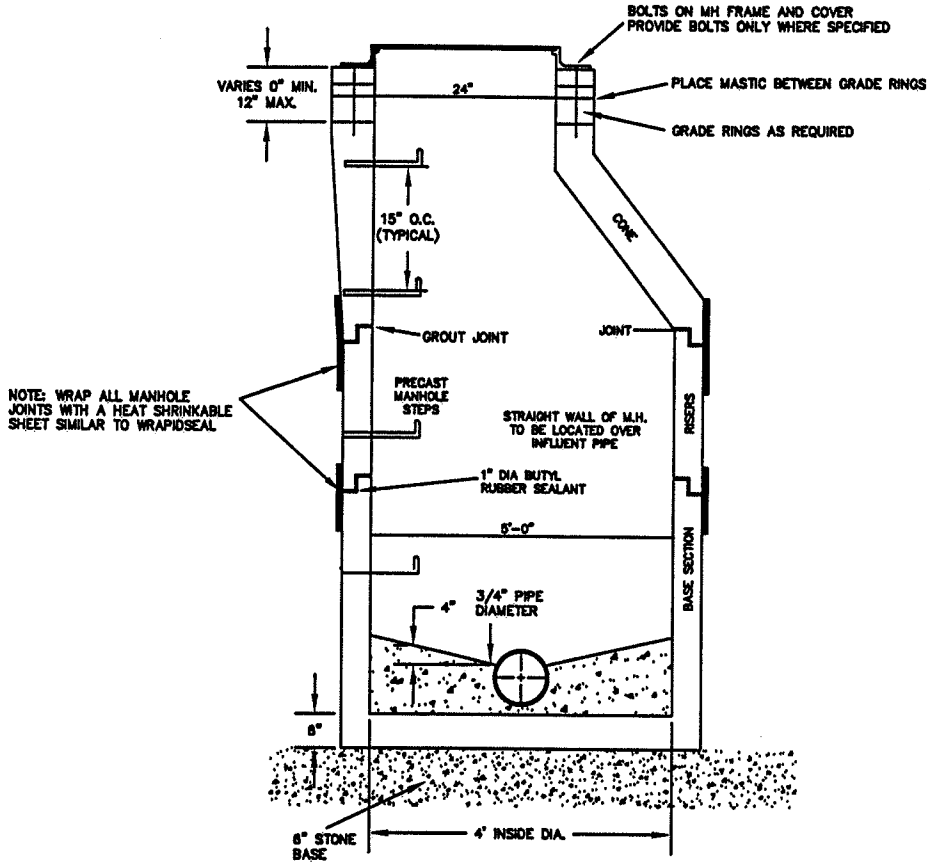

REVISIONS	
DATE	DESCRIPTION

CITY OF SHELBY STANDARDS

Shelby NORTH CAROLINA

4' DIAMETER PRECAST MANHOLE

STD. NO. 7.03

NOTES:
1. MANHOLE RISERS AND CONE SECTIONS SHALL CONFORM TO ASTM C-478, LATEST REVISION.
2. TRANSITION RINGS SHALL HAVE A MINIMUM CLEARANCE OF 2'-0" ABOVE THE EFFLUENT OVERT ELEVATION.
3. FLEXIBLE WATERTIGHT, SYNTHETIC RUBBER SLEEVES, WITH STAINLESS STEEL CLAMP: DRAW BOLT AND NUT; OR CAST-IN SLEEVE; OR "A" LOCK CONNECTION SHALL BE FURNISHED FOR EACH PIPE TO MANHOLE CONNECTION.
4. CONE SECTION TYPE TO BE DETERMINED BY CITY BASED ON INDIVIDUAL PROJECT NEEDS.

STANDARD MH RINGS AND COVERS: VULCAN FOUNDARY, INC., "V-B1384", NEENAH "R-1550", U.S. FOUNDARY "USF-669 VENTED", OR EQUAL.

WATERTIGHT MH RINGS AND COVERS: VULCAN FOUNDARY, INC., "V-2328", NEENAH "R-1915H", U.S. FOUNDARY "USF-669 BWT", OR EQUAL.

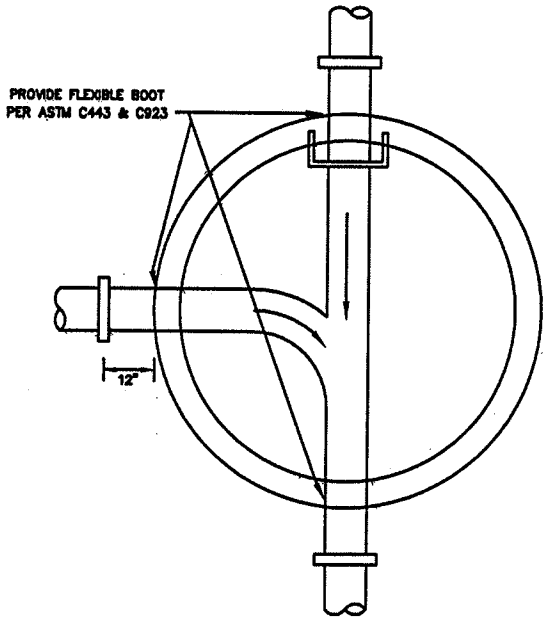

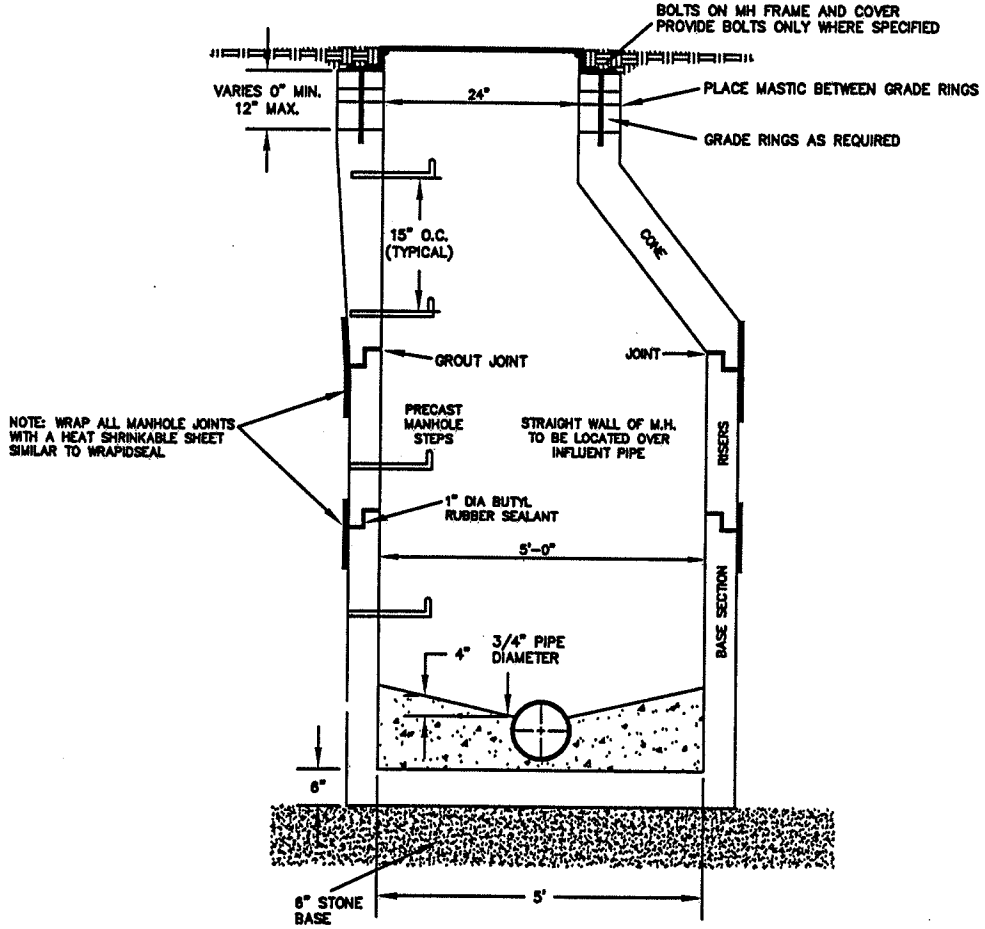

REVISIONS	
DATE	DESCRIPTION

CITY OF SHELBY STANDARDS

Shelby NORTH CAROLINA

5' DIAMETER PRECAST MANHOLE

STD. NO.
7.04

ESTIMATED WEIGHT			
VULCAN TYPE V-1384 LOAD RATING – HEAVY DUTY		U.S. FOUNDARY 669 RING & KL COVER LOAD RATING – HEAVY DUTY	
FRAME	240 LBS.	FRAME	190 LBS.
COVER	145 LBS.	COVER	125 LBS.
TOTAL	385 LBS.	TOTAL	315 LBS.

NOTE: MANHOLE COVERS IN ROADS TO BE SOLID

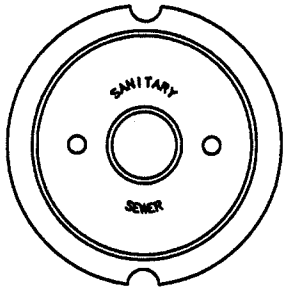

COVER FACE

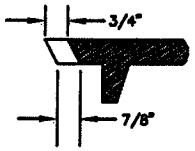

PICK SLOT DETAIL

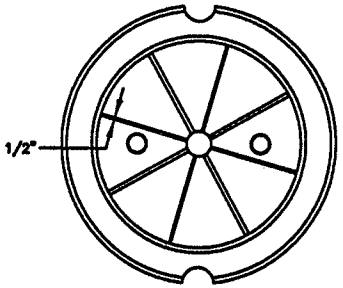

COVER BACK

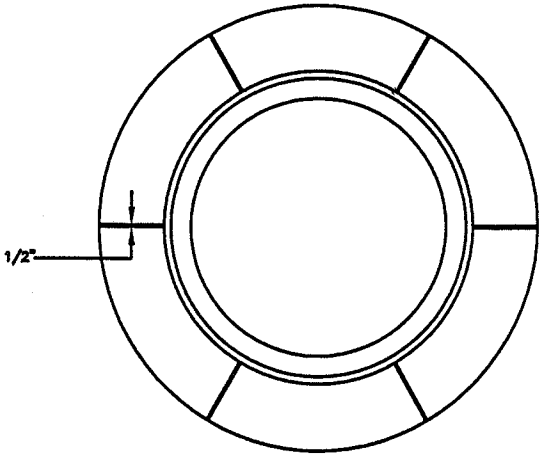

FRAME PLAN

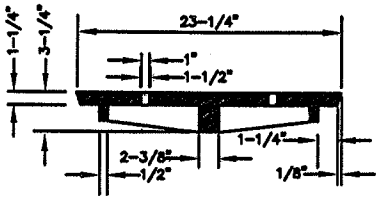

COVER SECTION

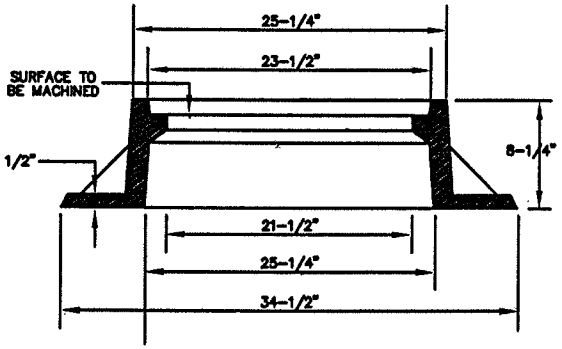

FRAME SECTION

REVISIONS	
DATE	DESCRIPTION

CITY OF SHELBY STANDARDS

Shelby NORTH CAROLINA

STANDARD MANHOLE RINGS AND COVER FOR MANHOLES IN PAVED AREAS

STD. NO.

7.05A

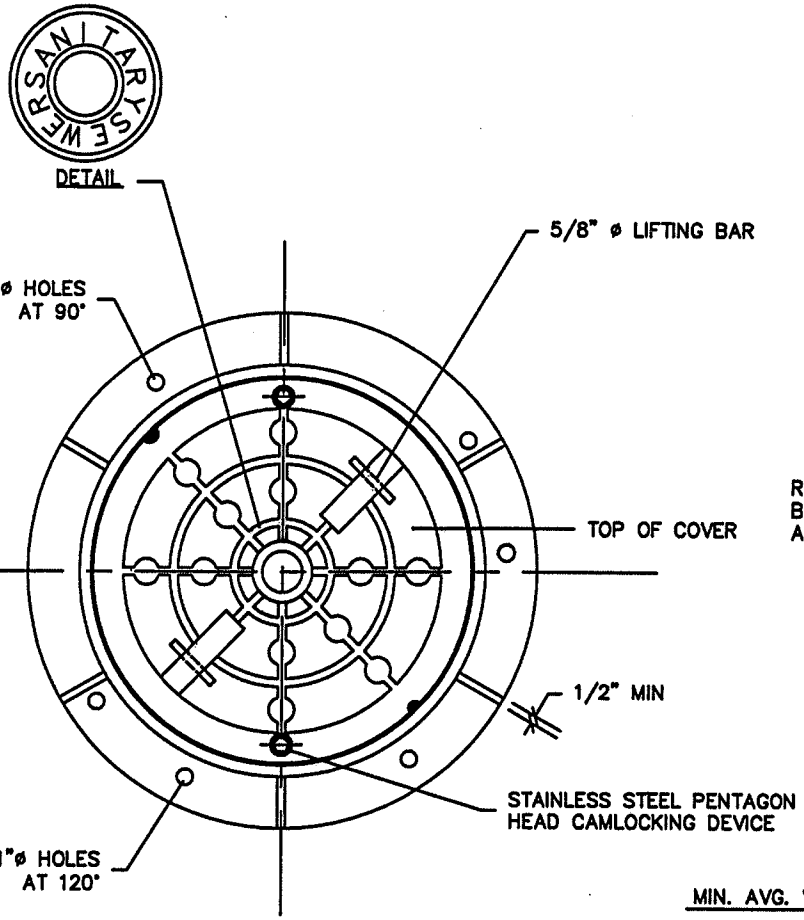

PLAN

ALL MANHOLE COVERS LOCATED OUTSIDE OF THE PAVEMENT SHALL BE BOLTED AND GROUTED TO THE MANHOLE CONE PER STD 7.06

NOTE: MANHOLE COVERS IN ROADS TO BE SOLID

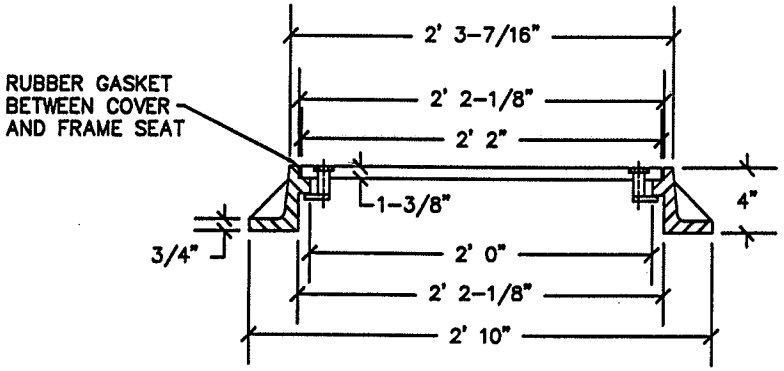

* MATING SURFACE BETWEEN COVER AND FRAME TO BE MACHINED SMOOTH

SECTION

MIN. AVG. WT.	
RING	160 LBS

REVISIONS	
DATE	DESCRIPTION

CITY OF SHELBY STANDARDS

Shelby NORTH CAROLINA

STANDARD MANHOLE RING AND COVER FOR WATERTIGHT MANHOLES

STD. NO.

7.05B

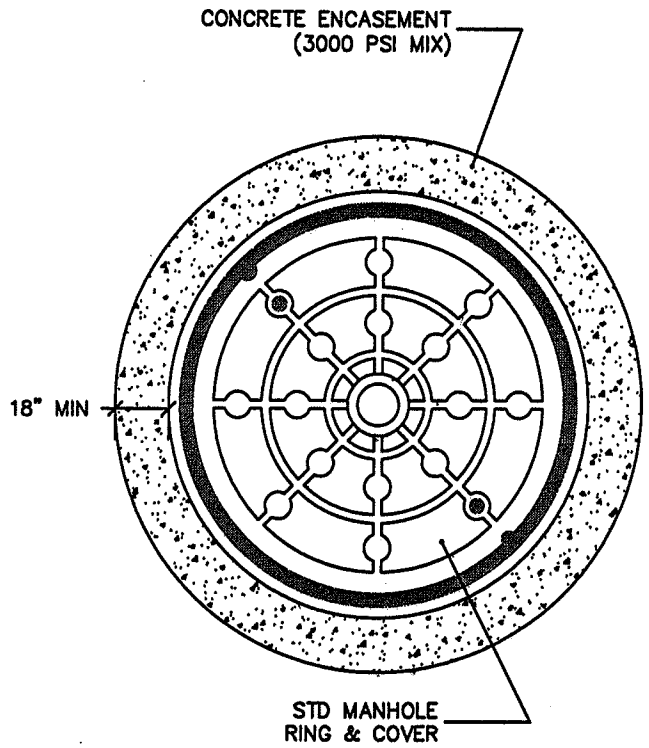

PLAN

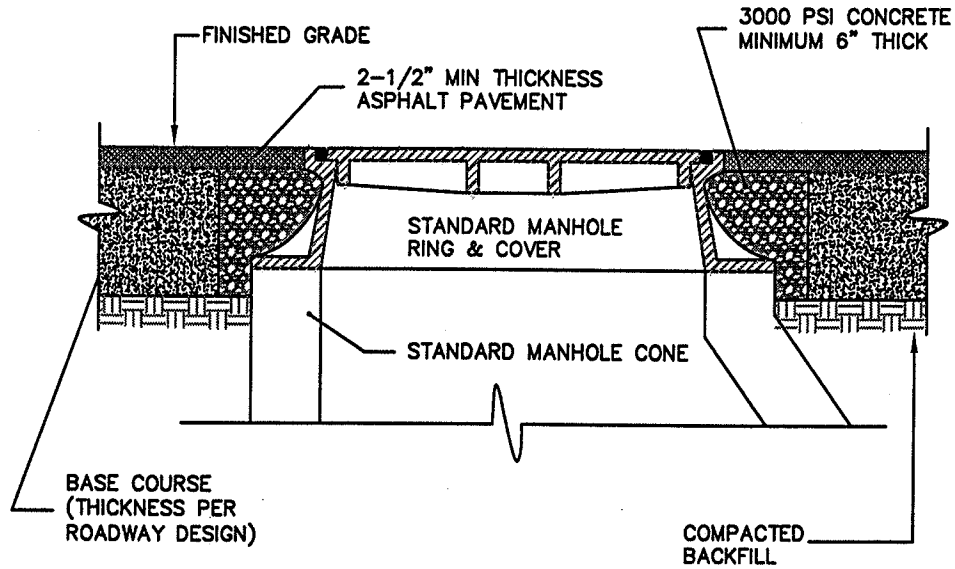

SECTION

REVISIONS	
DATE	DESCRIPTION

CITY OF SHELBY STANDARDS

Shelby NORTH CAROLINA

STANDARD MANHOLE RING AND COVER ENCASEMENT

STD. NO.

7.06

NOTES:
THE SEWER LINE ENTERING A DROP MANHOLE SHALL BE CONTINUOUS D.I.P. FROM THE UPSTREAM MANHOLE.

A DROP MANHOLE IS REQUIRED WHEN THE DIFFERENCE BETWEEN INVERTS IS 30" OR GREATER.

ALL JOINTS WITHIN THE MANHOLE SHALL BE OF THE MECHANICAL JOINT TYPE.

INSIDE DROP PIPE DIAMETER SHALL BE THE SAME AS THE INFLOW SEWER LINE DIAMETER.

STAINLESS STEEL STRAPPING SHALL BE 1" WIDE BY 1/8" THICK AND ATTACHED TO THE MANHOLE WALL WITH MASONRY ANCHORS.

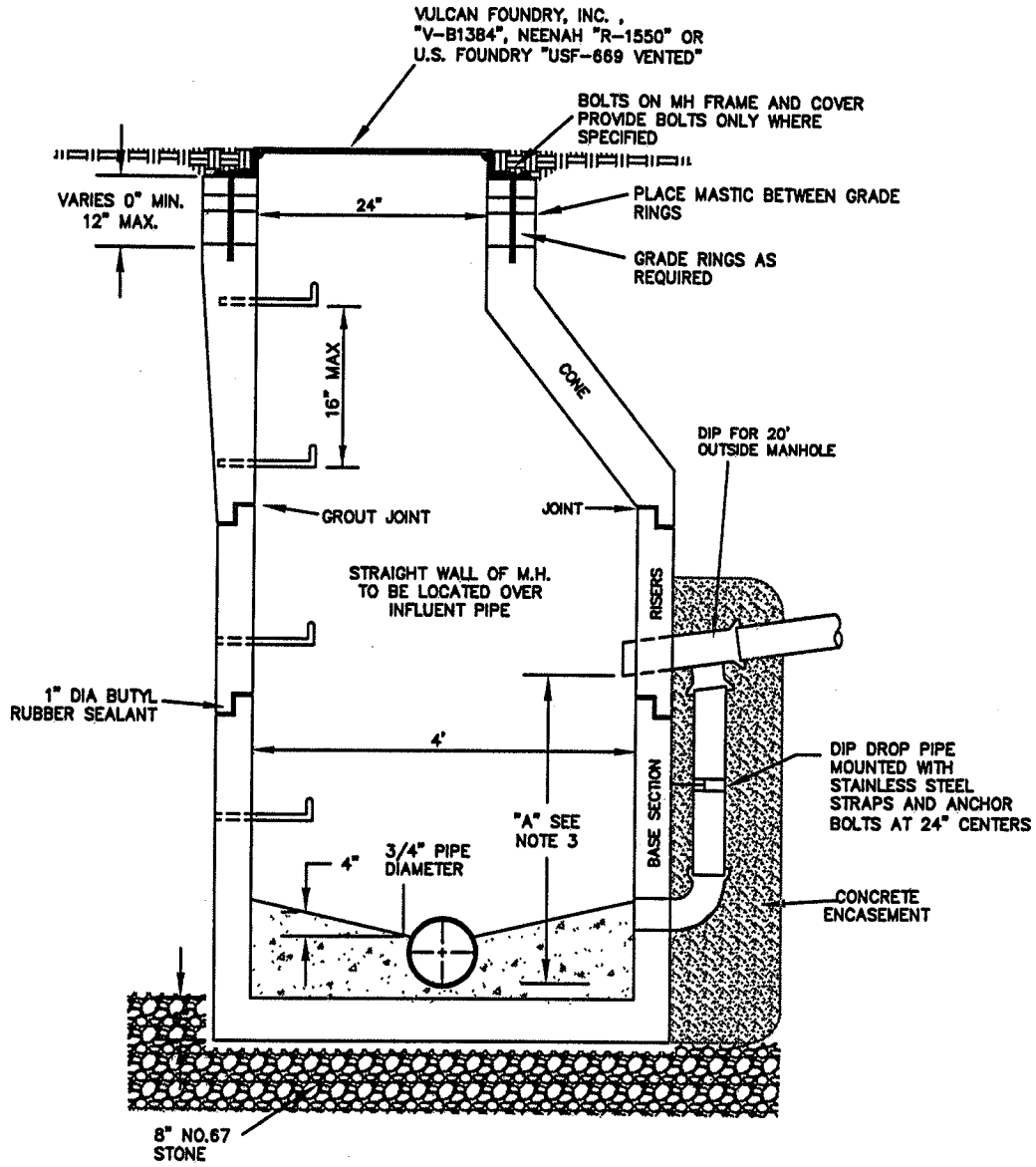

REVISIONS	
DATE	DESCRIPTION

CITY OF SHELBY STANDARDS

Shelby NORTH CAROLINA

STANDARD DROP MANHOLE

STD. NO.
7.07

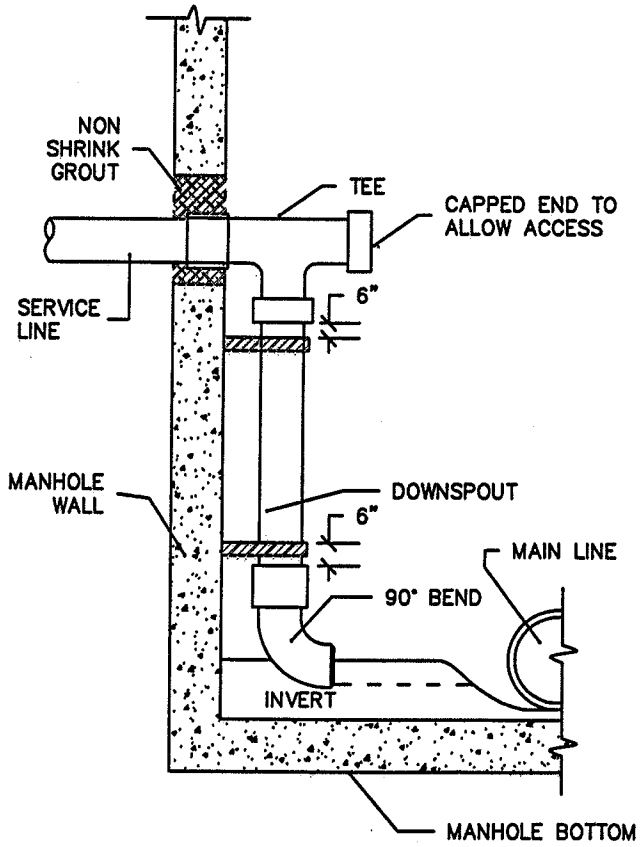

NOTES:
PIPING CONFIGURATION TO BE USED ON ALL DROPS OVER 30".

DROPS TO BE CONSTRUCTED OF A.B.S. OR P.V.C. PIPE.

PIPING CONFIGURATION TO BE INSTALLED WITHIN 3" OF MANHOLE WALL.

SERVICE LINE MAY NOT ENTER MANHOLE THROUGH CONE SECTION OR ANY JOINT.

STAINLESS STEEL STRAPPING SHALL BE 1" WIDE BY 1/8" THICK AND ATTACHED TO THE MANHOLE WALL WITH MASONRY ANCHORS.

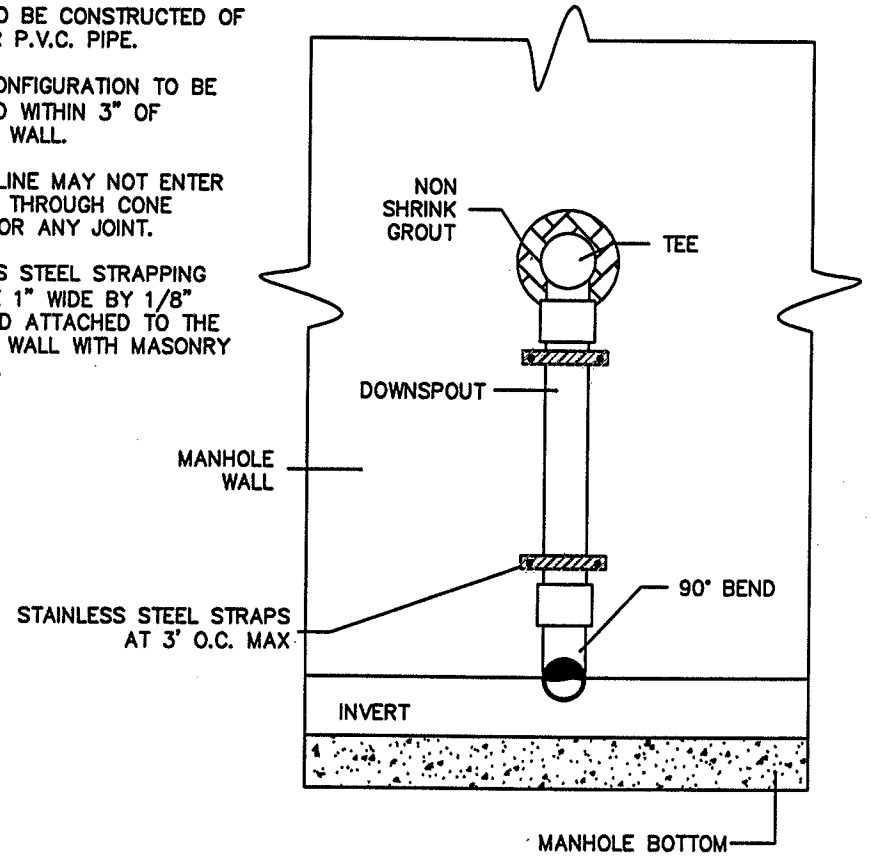

REVISIONS	
DATE	DESCRIPTION

CITY OF SHELBY STANDARDS

Shelby NORTH CAROLINA

STANDARD DROP MANHOLE FOR SEWER SERVICE

STD. NO.
7.08

USE 1/4" THICK ALUMINUM ACCESS COVER WITH 48"X48" OVERALL DIMENSION AND 24"X36" HINGED DOOR WITH LIFTING HANDLE AND LOCKING BAR (HALLIDAY PRODUCTS–SERIES S1R OR EQUIVALENT.) DOOR TO HAVE STAINLESS STEEL HINGES WITH TAMPER PROOF FASTENERS AND MUST LOCK IN THE OPEN POSITION. COVER MUST BE ANCHORED TO CONCRETE BOX.

NOTES:

1. ALL CONCRETE SHALL BE 3000 PSI COMPRESSIVE STRENGTH.

2. ALL VALVES SHALL OPEN COUNTER CLOCKWISE.

3. FRAME TO BE FLUSH WITH GROUND IN ROAD R/W & 2' ABOVE GROUND IN SEWER R/W.

4. CONCRETE FOOTINGS MAY BE PLACED AGAINST SHAPED BANKS IN LIEU OF FORMS.

5. FOOTING DIMENSIONS TO BE AS SHOWN OR AS DIRECTED BY THE ENGINEER.

6. MANHOLE SHALL CONFORM TO SPECIFICATIONS.

7. AIR & VACUUM VALVE TO BE LONG BODY TYPE FURNISHED WITH BACK FLUSHING ATTACHMENTS.

8. MANHOLE FRAME & COVER TO BE ANCHORED TO MANHOLE WITH RED JACKET MASONRY ANCHORS OR EQUAL AND THOROUGHLY SEALED TO CONCRETE WITH TAR SEALANT PUTTY.

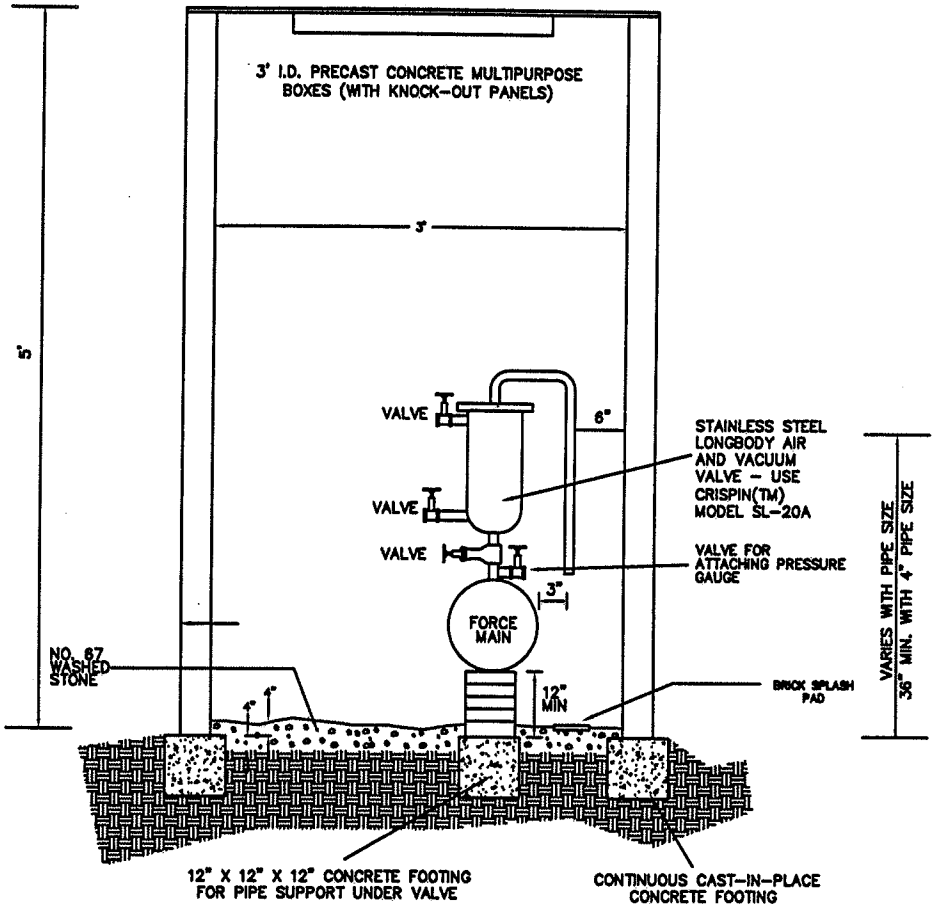

REVISIONS	
DATE	DESCRIPTION

CITY OF SHELBY STANDARDS

Shelby NORTH CAROLINA

STANDARD AIR RELEASE MANHOLE FOR SANITARY SEWER FORCE MAINS

STD. NO.

7.09

NOTES:
ALL PIPE AND FITTINGS SHALL BE OF A CONSISTENT MATERIAL THROUGHOUT THE ENTIRE SERVICE. TRANSITIONS BETWEEN C.I.S.P. AND PVC SHALL NOT BE PERMITTED.

PVC SERVICES SHALL BE INSTALLED WITH CLASS 'B' BEDDING.

SCHEDULE 40 PVC SHALL BE INSTALLED WITH A 4" DEEP #57 STONE BED.

SERVICE SADDLES SHALL BE A ROMAC INDUSTRIES STYLE 'CB' OR EQUAL.

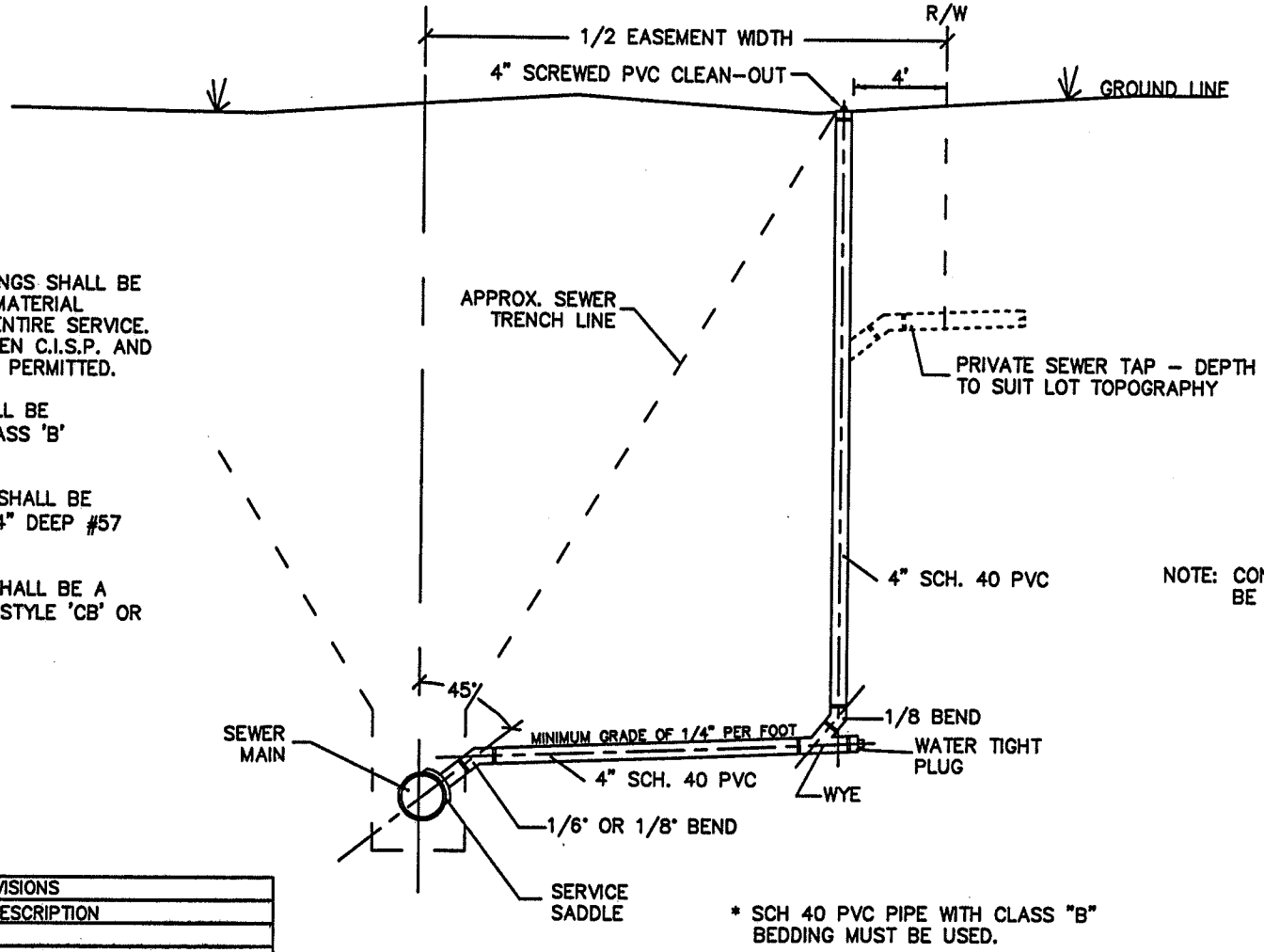

NOTE: CONNECTIONS TO MAIN MUST BE APPROVED BY CITY

* SCH 40 PVC PIPE WITH CLASS "B" BEDDING MUST BE USED.

REVISIONS	
DATE	DESCRIPTION

CITY OF SHELBY STANDARDS

Shelby NORTH CAROLINA

STANDARD 4" SANITARY SEWER TAP AND SERVICE FOR SEWER MAINS OVER 14' DEEP

STD. NO.

7.10

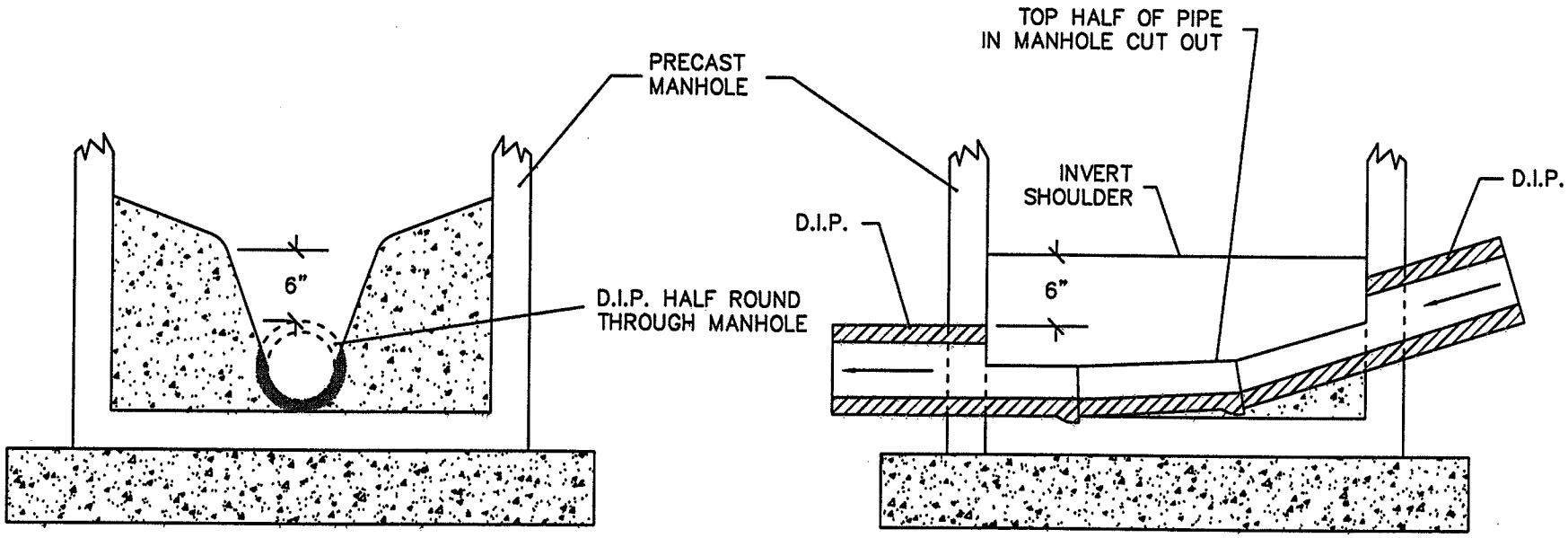

NOTE:
NO HORIZONTAL ALIGNMENT CHANGE CAN BE MADE WITHIN THIS MANHOLE TYPE. USE ON GRADES 10% OR GREATER.

EACH JOINT OF PIPE BETWEEN HIGH VELOCITY MANHOLE & MANHOLE UPGRADE SHALL HAVE A THRUST COLLAR. SEE STD. NO. 6.12.

REVISIONS	
DATE	DESCRIPTION

CITY OF SHELBY STANDARDS

Shelby NORTH CAROLINA

HIGH VELOCITY MANHOLE INVERT

STD. NO.
7.11

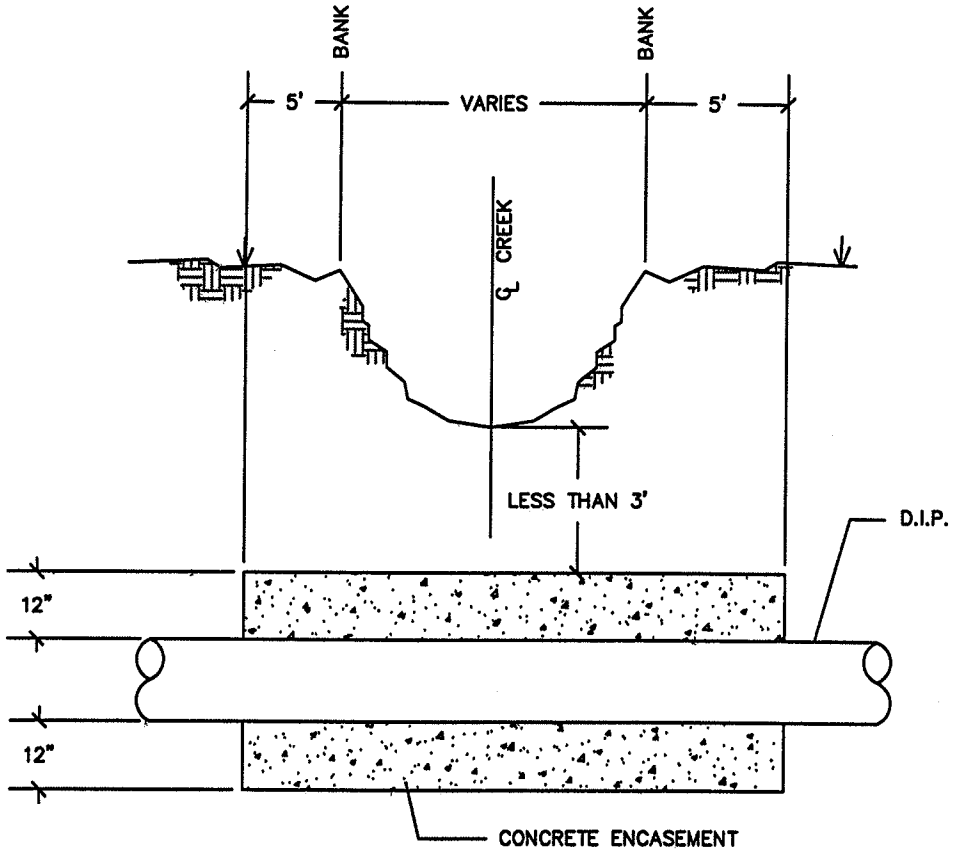

NOTE:
CONCRETE SHALL BE 3000 PSI.

CONCRETE ENCASEMENT NOT REQUIRED WHEN PIPE IS AT LEAST THREE (3) FEET UNDER THE CENTERLINE OF CREEK BOTTOM.

SEWER SERVICES SHALL BE CONSTRUCTED OF C.I.S.P.

ANY PIPE RUN REQUIRING A CREEK CROSSING SHALL BE CONSTRUCTED OF A CONSISTENT MATERIAL. TRANSITIONS AND FERNCO COUPLINGS SHALL NOT BE PERMITTED.

CREEK CROSSINGS GREATER THAN 3' DEEP MAY BE CONSTRUCTED OF PVC PIPE.

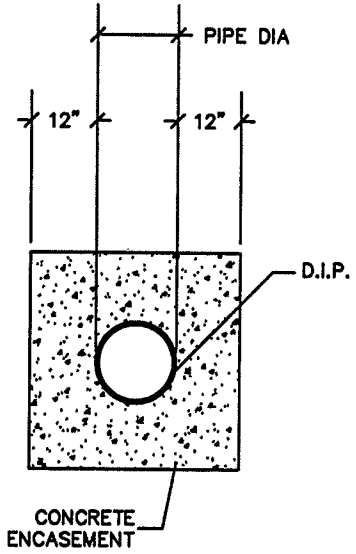

REVISIONS	
DATE	DESCRIPTION

APPLICABLE TO WATER LINES, SEWER LINES, SEWER SERVICES, AND FORCE MAINS.

CITY OF SHELBY STANDARDS

Shelby NORTH CAROLINA

CONCRETE ENCASEMENT FOR STREAM CROSSING

STD. NO.
7.12

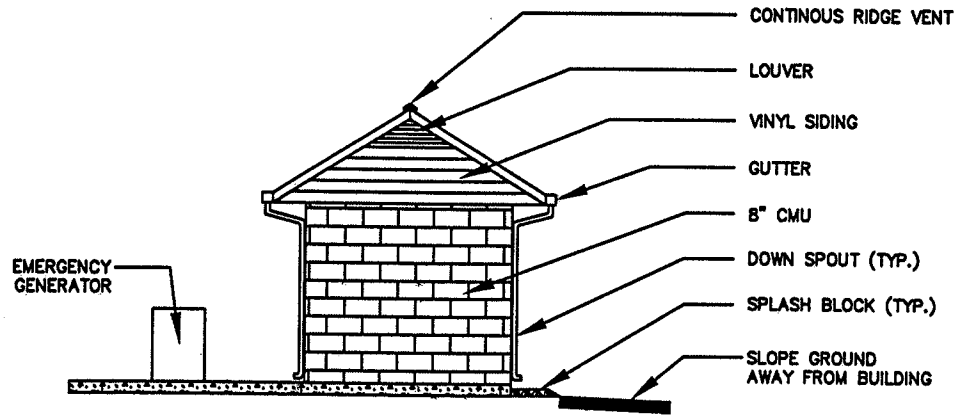

LEFT SIDE ELEVATION (TYPICAL)

SCALE: N.T.S.

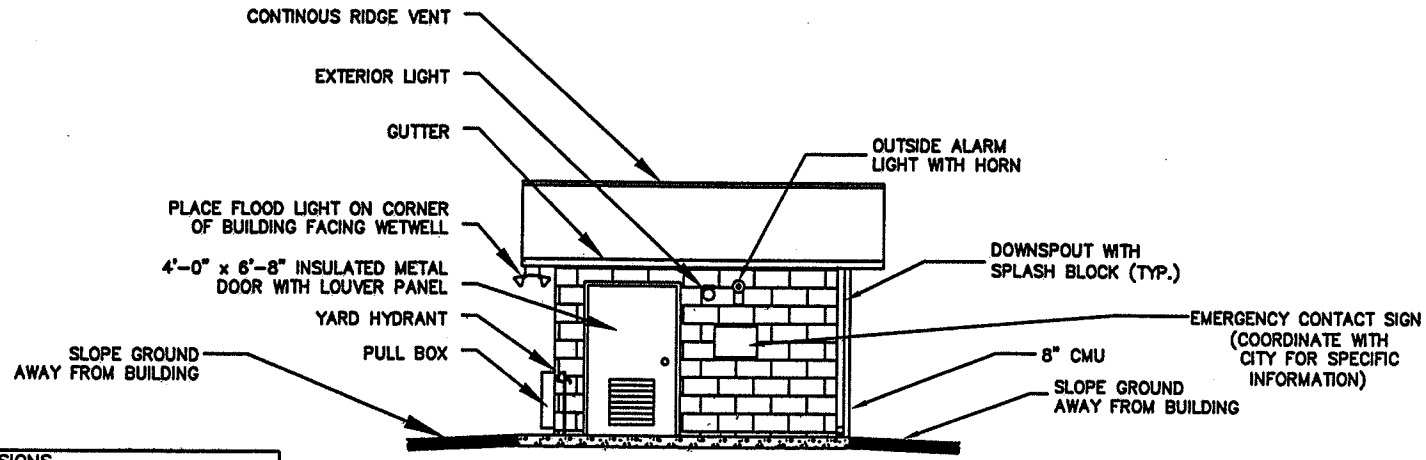

FRONT ELEVATION

SCALE: N.T.S.

REVISIONS	
DATE	DESCRIPTION

CITY OF SHELBY STANDARDS

Shelby NORTH CAROLINA

LIFT STATION BUILDING ELEVATIONS

STD. NO.

7.13